PROJECT	SHEET NUMBER

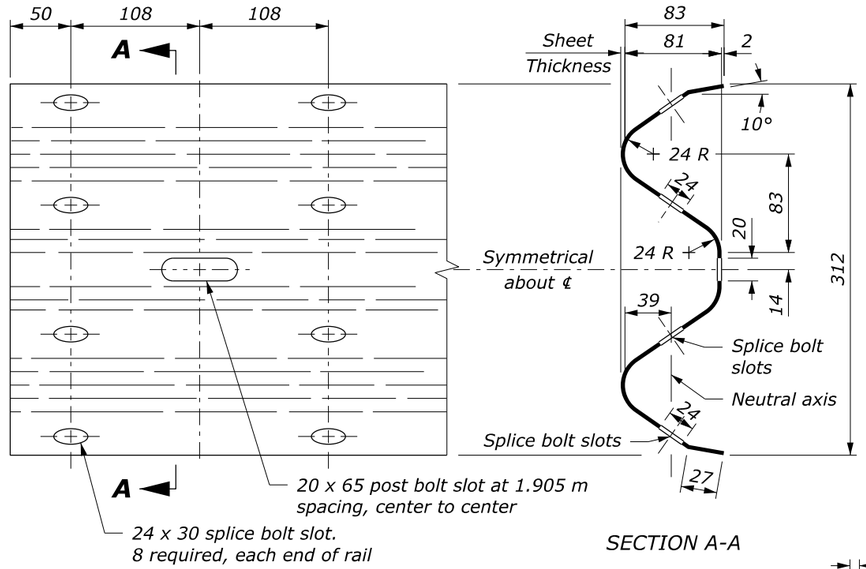

RAIL ELEVATION

SECTION A-A

W BEAM RAIL

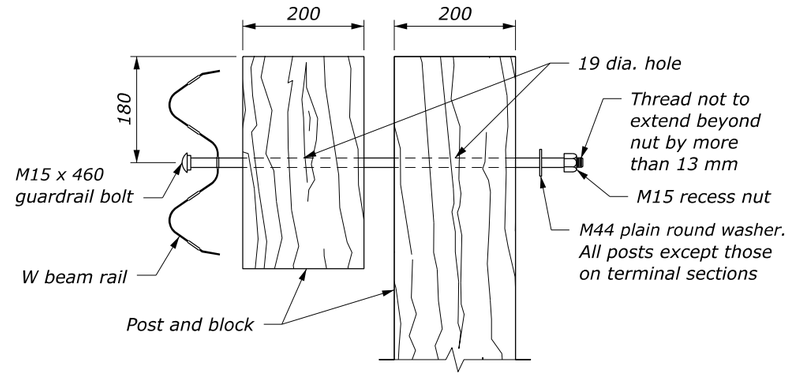

POST BOLT ASSEMBLY

NOTE:

1. When encountering impenetrable material, see Section M617-13.
2. See Special Contract Requirements when 2 m or longer posts are specified.
3. See Special Contract Requirements when the alternative hole arrangement is specified.
4. Install delineator every fourth post. Fasten delineator to post using two 50 mm x 10 mm lag screws with washers, along centerline of post; or fasten as specified by the manufacturer.
5. Dimensional tolerances not shown or implied are intended to be those consistent with the proper functioning of the part, including its appearance, and accepted manufacturing practices.
6. Furnish hardware in the metric sizes shown. Equivalent US Customary sizes may be used when metric sizes are unavailable.
7. Dimensions without units are millimeters.

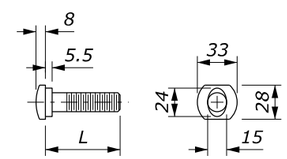

M15 GUARDRAIL BOLT

L	Thread Length
32	30 minimum
50	45 minimum
255	100 minimum
460	100 minimum
640	100 minimum

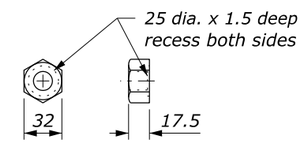

M15 RECESS NUT

GUARDRAIL BOLT AND RECESS NUT

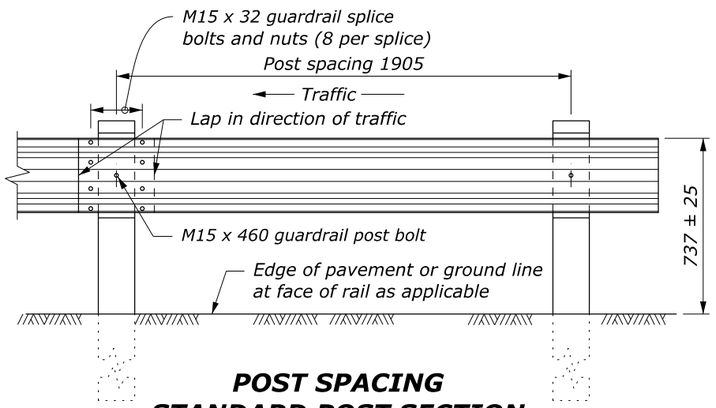

POST SPACING
STANDARD POST SECTION

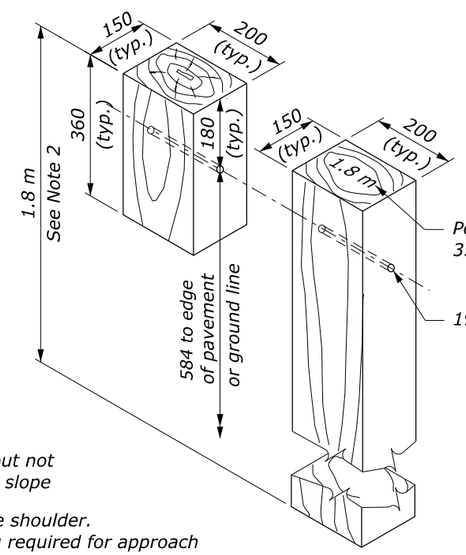

STANDARD HOLE ARRANGEMENT
POST AND BLOCK DETAIL

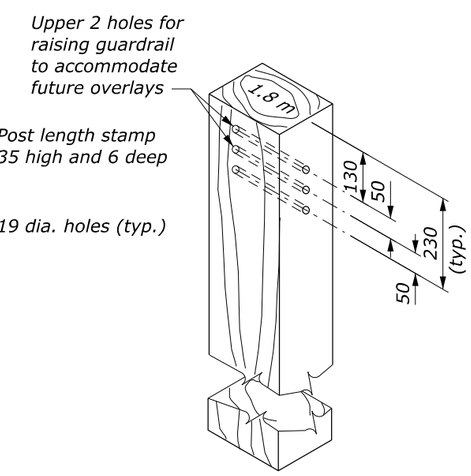

ALTERNATE HOLE ARRANGEMENT
POST AND BLOCK DETAIL

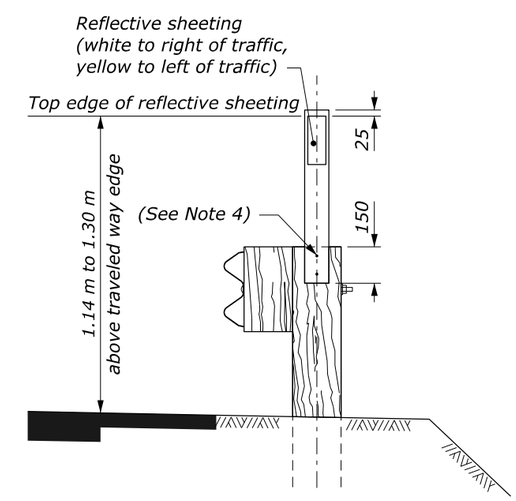

FLEXIBLE GUIDE POST
GUARDRAIL MOUNT

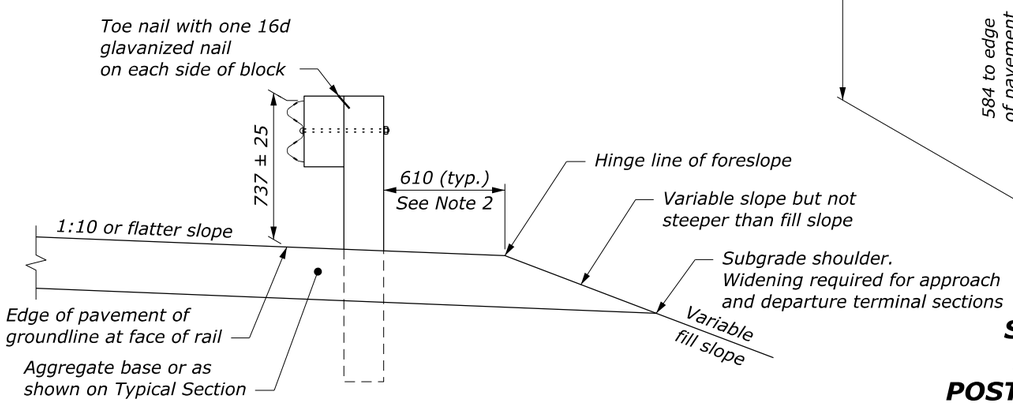

TYPICAL GUARDRAIL CROSS SECTION

NO SCALE

U.S. DEPARTMENT OF TRANSPORTATION
FEDERAL HIGHWAY ADMINISTRATION
OFFICE OF FEDERAL LANDS HIGHWAY

METRIC FLH STANDARD

G4 W-BEAM GUARDRAIL WOOD POSTS

STANDARD APPROVED FOR USE 3/1996
REVISED: 8/1997 6/2005 7/2022

STANDARD
M617-10