STATE	PROJECT	SHEET NUMBER
OR	PFH 160-1(1)	K.1

Designed by: A. Designer | Checked by: D. Checker | 9/2001 | 11/2001

F:\StanDraw\SampleSheets\or160lira.dgn 11/28/01

Ac=C.B.
As=1

This sheet uses US Customary Units

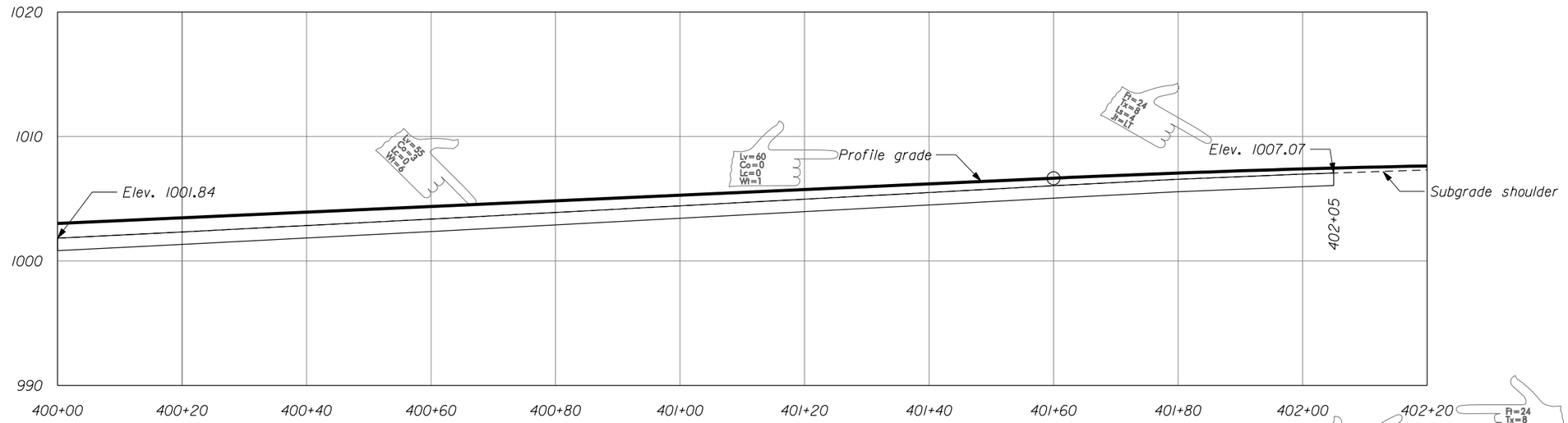

GEOTEXTILE REINFORCED SLOPE ELEVATION

Lv=60
Co=0
Lc=0
Wt=2

Fi=24
Tx=12
Ls=6
Jt=CC

Lv=60
Co=0
Lc=0
Wt=1

SAMPLE

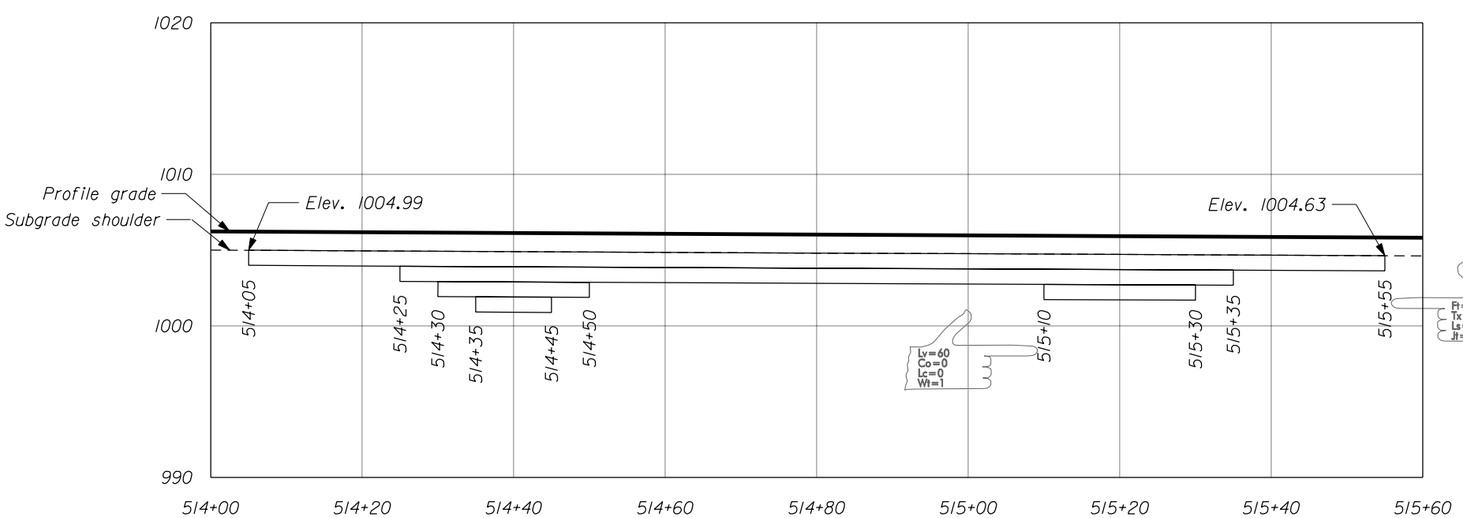

GEOTEXTILE REINFORCED SLOPE ELEVATION

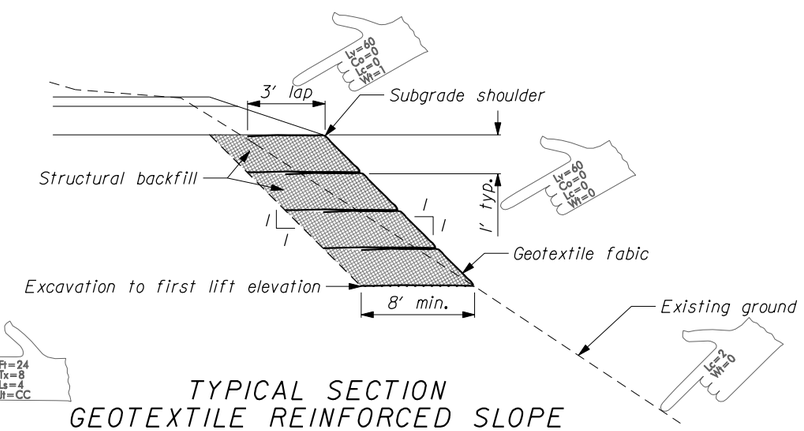

TYPICAL SECTION
GEOTEXTILE REINFORCED SLOPE

Fi=85
Tx=18
Ls=9
Jt=CC

GEOTEXTILE REINFORCED SLOPE