STATE	PROJECT	SHEET NUMBER

METAL ROUND PIPE CULVERT

FILL HEIGHT AND METAL THICKNESS TABLE FOR HELICAL LOCKSEAM AND WELDED SEAM PIPE CULVERT

STEEL

PIPE SIZE DIAMETER INCHES	MINIMUM COVER INCHES	2⅔" x ½" CORRUGATIONS					3" x 1" CORRUGATIONS					5" x 1" CORRUGATIONS				
		METAL THICKNESS (INCH/GAGE)														
		0.064/16	0.079/14	0.109/12	0.138/10	0.168/8	0.064/16	0.079/14	0.109/12	0.138/10	0.168/8	0.064/16	0.079/14	0.109/12	0.138/10	0.168/8
		MAXIMUM FILL HEIGHT ABOVE TOP OF PIPE (FEET)														
12	12	100	100	100	100	100										
15	12	100	100	100	100	100										
18	12	100	100	100	100	100										
21	12	100	100	100	100	100										
24	12	100	100	100	100	100										
30	12	85	100	100	100	100										
36	12	71	89	100	100	100	81	100	100	100	100					
42	12	61	76	100	100	100	70	87	100	100	100					
48	12	53	66	93	100	100	61	76	100	100	100	54	68	95	100	100
54	12		59	83	100	100	54	68	95	100	100	48	60	85	100	100
60	12			74	97	100	49	61	86	100	100	43	54	76	98	100
66	12				87	100	44	55	78	100	100	39	49	69	89	100
72	12				80	97	40	51	71	92	100	36	45	63	82	100
78	12					87	37	47	66	85	100	33	42	58	75	92
84	12					75	35	43	61	78	96	31	39	54	70	86
90	12						32	40	57	73	90	29	36	51	65	80
96	12							38	53	69	84		34	48	61	75
102	18							36	50	65	79		32	45	57	71
108	18								47	61	75			42	54	67
114	18								45	58	71			40	52	63
120	18								43	55	67			38	49	60
126	18									52	64				47	57
132	18									50	61				44	54
138	18									48	58				42	52
144	18										56					50

ALUMINUM

PIPE SIZE DIAMETER INCHES	MINIMUM COVER INCHES	2⅔" x ½" CORRUGATIONS					3" x 1" CORRUGATIONS				
		METAL THICKNESS (INCH/GAGE)									
		0.060/16	0.075/14	0.105/12	0.135/10	0.164/8	0.060/16	0.075/14	0.105/12	0.135/10	0.164/8
		MAXIMUM FILL HEIGHT ABOVE TOP OF PIPE (FEET)									
12	12	100	100	100	100	100					
15	12	100	100	100	100	100					
18	12	100	100	100	100	100					
21	12	88	100	100	100	100					
24	12	77	97	100	100	100					
30	12	62	77	100	100	100	71	89	100	100	100
36	12	52	64	90	100	100	59	74	100	100	100
42	12	44	55	77	99	100	51	64	89	100	100
48	12			67	87	100	44	56	78	100	100
54	18			54	71	88	39	50	69	93	100
60	18				57	72	35	45	62	83	98
66	18					58	32	40	56	76	89
72	18					45	30	37	55	70	82
78	24							34	48	64	75
84	24								44	59	70
90	24								41	62	65
96	24								38	51	61
102	24									46	55
108	24									42	50
114	24										45
120	24										40

NOTE:

1. When directed, camber pipe culverts upward from a chord through the inlet and outlet inverts an ordinate amount equal to 1% of the pipe length. Develop camber on a parabolic curve. If the midpoint elevation on the parabolic curve as designed exceeds the elevation of the inlet invert, reduce the amount of camber or increase the pipe culvert gradient.
2. Fill heights exceeding 100 feet require special analysis by the CO.
3. The fill heights in the table are for helical lockseam and welded seam pipe only. Fill heights for culvert pipe with annular corrugations are more restrictive than those of helical lockseam and welded seam pipe. Obtain approval before furnishing annular corrugation pipe.
4. Measure minimum cover from the top of the pipe culvert to the subgrade for flexible pavements, and to the top of the pavement for rigid pavements. Measure maximum fill height from the top of the pipe to the top of the pavement for both flexible and rigid pavement.

METAL PIPE ARCH CULVERT

FILL HEIGHT AND METAL THICKNESS TABLE FOR HELICAL LOCKSEAM AND WELDED SEAM PIPE CULVERT

STEEL

PIPE ARCH SIZE SPAN x RISE INCHES	EQUI-VALENT DIAMETER INCHES	MINIMUM CORNER RADIUS INCHES	MINIMUM COVER INCHES	2⅔" x ½" CORRUGATIONS					3" x 1" CORRUGATIONS				5" x 1" CORRUGATIONS			
				METAL THICKNESS (INCH/GAGE)												
				0.064/16	0.079/14	0.109/12	0.138/10	0.168/8	0.079/14	0.109/12	0.138/10	0.168/8	0.079/14	0.109/12	0.138/10	0.168/8
				MAXIMUM FILL HEIGHT ABOVE TOP OF PIPE (FEET)												
17 x 13	15	3	12	13												
21 x 15	18	3	12	12												
24 x 18	21	3	12	13												
28 x 20	24	3	12	13												
35 x 24	30	3	12	12												
42 x 29	36	3.5	12	12												
49 x 33	42	4	12		12											
57 x 38	48	5	12			12										
60 x 46	54	8	15							21				21		
64 x 43	54	6	12			12										
66 x 51	60	9	15							21				21		
71 x 47	60	7	12				12									
73 x 55	66	12	18							20				20		
77 x 52	66	8	12					12								
81 x 59	72	14	18						17				17			
83 x 57	72	9	12					12								
87 x 63	78	14	18						17				17			
95 x 67	84	16	18						17				17			
103 x 71	90	16	18							17			17			
112 x 75	96	18	21							16				16		
117 x 79	102	18	21							16				16		
128 x 83	108	18	24								16				16	
137 x 87	114	18	24								16				16	
142 x 91	120	18	24									16				16

ALUMINUM

PIPE ARCH SIZE SPAN x RISE INCHES	EQUI-VALENT DIAMETER INCHES	MINIMUM CORNER RADIUS INCHES	MINIMUM COVER INCHES	2⅔" x ½" CORRUGATIONS				3" x 1" CORRUGATIONS			
				METAL THICKNESS (INCH/GAGE)							
				0.060/16	0.075/14	0.105/12	0.135/10	0.060/16	0.075/14	0.105/12	0.135/10
				MAXIMUM FILL HEIGHT ABOVE TOP OF PIPE (FEET)							
17 x 13	15	3	12	13							
21 x 15	18	3	12	12							
24 x 18	21	3	12	13							
28 x 20	24	3	12		13						
35 x 24	30	3	12		12						
42 x 29	36	3.5	15			12					
49 x 33	42	4	15			12					
57 x 38	48	5	15				12				
60 x 46	54	8	15					21			
64 x 43	54	6	18				12				
66 x 51	60	9	18					21			
73 x 55	66	12	18						20		
81 x 59	72	14	21							17	
87 x 63	78	14	21							17	
95 x 67	84	16	24							17	
103 x 71	90	16	24								17

NO SCALE

U.S. DEPARTMENT OF TRANSPORTATION
FEDERAL HIGHWAY ADMINISTRATION
FEDERAL LANDS HIGHWAY

U.S. CUSTOMARY STANDARD

METAL PIPE CULVERT

STANDARD APPROVED FOR USE 12/1993
REVISED: 4/1994 6/2005

STANDARD
602-1

24 August 2015 3:46 PM c:\myfiles\pw_production\dms52075\Std602-1.dgn [USC]

STATE	PROJECT	SHEET NUMBER

METAL ROUND PIPE CULVERT

FILL HEIGHT AND METAL THICKNESS TABLE FOR HELICAL LOCKSEAM AND WELDED SEAM PIPE CULVERT

STEEL

PIPE SIZE DIAMETER	MINIMUM COVER	68 x 13 CORRUGATIONS					75 x 25 CORRUGATIONS					125 x 25 CORRUGATIONS				
		METAL THICKNESS														
		1.63	2.01	2.77	3.51	4.27	1.63	2.01	2.77	3.51	4.27	1.63	2.01	2.77	3.51	4.27
		MAXIMUM FILL HEIGHT ABOVE TOP OF PIPE (METERS)														
300	300	30.0	30.0	30.0	30.0	30.0										
375	300	30.0	30.0	30.0	30.0	30.0										
450	300	30.0	30.0	30.0	30.0	30.0										
525	300	30.0	30.0	30.0	30.0	30.0										
600	300	30.0	30.0	30.0	30.0	30.0										
750	300	25.9	30.0	30.0	30.0	30.0										
900	300	21.6	27.0	30.0	30.0	30.0	24.8	30.0	30.0	30.0	30.0					
1050	300	18.5	23.1	30.0	30.0	30.0	21.2	26.6	30.0	30.0	30.0					
1200	300	16.2	20.2	28.4	30.0	30.0	18.5	23.2	30.0	30.0	30.0	16.5	20.7	29.0	30.0	30.0
1350	300		18.0	25.2	30.0	30.0	16.5	20.6	29.0	30.0	30.0	14.7	18.4	25.8	30.0	30.0
1500	300			22.7	29.5	30.0	14.8	18.6	26.1	30.0	30.0	13.2	16.5	23.2	29.9	30.0
1650	300				26.5	30.0	13.5	16.9	23.7	30.0	30.0	12.0	15.0	21.1	27.1	30.0
1800	300				24.3	29.7	12.3	15.4	21.7	28.0	30.0	11.0	13.8	19.3	24.9	30.0
1950	300					26.4	11.4	14.3	20.0	25.8	30.0	10.1	12.7	17.8	23.0	28.1
2100	300					22.8	10.6	13.2	18.6	23.9	29.3	9.4	11.8	16.5	21.3	26.1
2250	300						9.8	12.3	17.3	22.3	27.4	8.8	11.0	15.4	19.9	24.3
2400	300							11.6	16.2	20.9	25.7		10.3	14.5	18.6	22.8
2550	450							10.9	15.3	19.7	24.1		9.7	13.6	17.5	21.5
2700	450								14.4	18.6	22.8			12.8	16.6	20.3
2850	450								13.7	17.6	21.6			12.2	15.7	19.2
3000	450								13.0	16.7	20.5			11.6	14.9	18.2
3150	450									15.9	19.5				14.2	17.4
3300	450									15.2	18.6				13.5	16.6
3450	450									14.5	17.8				12.9	15.8
3600	450										17.1					15.2

ALUMINUM

PIPE SIZE DIAMETER	MINIMUM COVER	68 x 13 CORRUGATIONS					75 x 25 CORRUGATIONS				
		METAL THICKNESS									
		1.52	1.91	2.67	3.43	4.17	1.52	1.91	2.67	3.43	4.17
		MAXIMUM FILL HEIGHT ABOVE TOP OF PIPE (METERS)									
300	300	30.0	30.0	30.0	30.0	30.0					
375	300	30.0	30.0	30.0	30.0	30.0					
450	300	30.0	30.0	30.0	30.0	30.0					
525	300	26.9	30.0	30.0	30.0	30.0					
600	300	23.6	29.5	30.0	30.0	30.0					
750	300	18.8	23.6	30.0	30.0	30.0	21.7	27.2	30.0	30.0	30.0
900	300	15.7	19.6	27.5	30.0	30.0	18.0	22.7	30.0	30.0	30.0
1050	300	13.4	16.8	23.6	30.3	30.0	15.5	19.4	27.1	30.0	30.0
1200	300			20.3	26.4	30.0	13.5	17.0	23.7	30.0	30.0
1350	450			16.5	21.6	26.7	12.0	15.1	21.1	28.2	30.0
1500	450				17.5	21.8	10.8	13.6	19.0	25.4	29.9
1650	450					17.6	9.8	12.3	17.2	23.1	27.2
1800	450					13.8	9.0	11.3	16.8	21.2	24.9
1950	600							10.4	14.6	19.5	23.0
2100	600								13.5	18.1	21.4
2250	600								12.6	18.9	19.9
2400	600								11.6	15.6	18.5
2550	600									14.1	16.7
2700	600									12.7	15.1
2850	600										13.6
3000	600										12.2

NOTE:

1. When directed, camber pipe culverts upward from a chord through the inlet and outlet inverts an ordinate amount equal to 1% of the pipe length. Develop camber on a parabolic curve. If the midpoint elevation on the parabolic curve as designed exceeds the elevation of the inlet invert, reduce the amount of camber or increase the pipe culvert gradient.
2. Fill heights exceeding 30 meters require special analysis by the CO.
3. The fill heights in the table are for helical lockseam and welded seam pipe only. Fill heights for culvert pipe with annular corrugations are more restrictive than those of helical lockseam and welded seam pipe. Obtain approval before furnishing annular corrugation pipe.
4. Measure minimum cover from the top of the pipe culvert to the subgrade for flexible pavements, and to the top of the pavement for rigid pavements. Measure maximum fill height from the top of the pipe to the top of the pavement for both flexible and rigid pavement.
5. Dimensions without units are millimeters.

METAL PIPE ARCH CULVERT

FILL HEIGHT AND METAL THICKNESS TABLE FOR HELICAL LOCKSEAM AND WELDED SEAM PIPE CULVERT

STEEL

PIPE ARCH SIZE SPAN x RISE	EQUI-VALENT DIAMETER	MINIMUM CORNER RADIUS	MINIMUM COVER	68 x 13 CORRUGATIONS					75 x 25 CORRUGATIONS					125 x 25 CORRUGATIONS			
				METAL THICKNESS													
				1.63	2.01	2.77	3.51	4.27	2.01	2.77	3.51	4.27	2.01	2.77	3.51	4.27
				MAXIMUM FILL HEIGHT ABOVE TOP OF PIPE (METERS)												
430 x 330	375	75	300	4.0												
530 x 380	450	75	300	3.7												
610 x 460	525	75	300	4.0												
710 x 510	600	75	300	4.0												
890 x 610	750	75	300	3.7												
1070 x 740	900	90	300	3.7												
1240 x 840	1050	100	300		3.7											
1450 x 970	1200	125	300			3.7										
1520 x 1170	1350	205	375							6.4				6.4		
1630 x 1090	1350	150	300			3.7										
1680 x 1300	1500	230	375							6.4				6.4		
1800 x 1190	1500	180	300				3.7									
1850 x 1400	1650	305	450							6.1				6.1		
1960 x 1320	1650	205	300					3.7								
2060 x 1500	1800	355	450						5.2				5.2			
2110 x 1450	1800	230	300					3.7								
2210 x 1600	1950	355	450						5.2				5.2			
2410 x 1700	2100	405	450						5.2				5.2			
2620 x 1800	2250	405	450							5.2			5.2			
2840 x 1910	2400	455	525							4.9				4.9		
2970 x 2010	2550	455	525							4.9				4.9		
3250 x 2110	2700	455	600								4.9				4.9	
3480 x 2210	2850	455	600								4.9				4.9	
3610 x 2310	3000	455	600									4.9				4.9

ALUMINUM

PIPE ARCH SIZE SPAN x RISE	EQUI-VALENT DIAMETER	MINIMUM CORNER RADIUS	MINIMUM COVER	68 x 13 CORRUGATIONS				75 x 25 CORRUGATIONS			
				METAL THICKNESS							
				1.52	1.91	2.67	3.43	1.52	1.91	2.67	3.43
				MAXIMUM FILL HEIGHT ABOVE TOP OF PIPE (METERS)							
430 x 330	375	75	300	4.0							
530 x 380	450	75	300	3.7							
610 x 460	525	75	300	4.0							
710 x 510	600	75	300		4.0						
890 x 610	750	75	300		3.7						
1070 x 740	900	90	375			3.7					
1240 x 840	1050	100	375			3.7					
1450 x 970	1200	125	375				3.7				
1520 x 1170	1350	205	375					6.4			
1630 x 1090	1350	150	450				3.7				
1680 x 1300	1500	230	450					6.4			
1850 x 1400	1650	305	450						6.1		
2060 x 1500	1800	355	525							5.2	
2210 x 1600	1950	355	525							5.2	
2410 x 1700	2100	405	600							5.2	
2620 x 1800	2250	405	600								5.2

NO SCALE

U.S. DEPARTMENT OF TRANSPORTATION
FEDERAL HIGHWAY ADMINISTRATION
FEDERAL LANDS HIGHWAY

METRIC STANDARD

METAL PIPE CULVERT

STANDARD APPROVED FOR USE 3/1996
REVISED: 10/1997 6/2005

STANDARD
M602-1

c:\myfiles\pw_production\dms52075\Std602-1.dgn [Metric]
24 August 2015 3:46 PM

STATE	PROJECT	SHEET NUMBER

COUPLING BANDS FOR METAL PIPE CULVERT [1]

CORRUGATION SIZE [2] INCHES	ROUND PIPE DIAMETER INCHES	PIPE ARCH SPAN × RISE INCHES	MINIMUM BAND WIDTH (INCHES)		
			ANNULAR CORRUGATED BANDS [3]	HELICALLY CORRUGATED BANDS [4]	SEMI-CORRUGATED BANDS [5]
1½ × ¼	underdrain [6]	-	10.5	7	10.5
2⅔ × ½	12 to 36	17 × 13 to 42 × 29	7	12	
	42 to 72	49 × 33 to 83 × 57	10.5	12	
	78 to 84	-	10.5	12	10.5
3 × 1	36 to 72	60 × 46 to 81 × 59	12	14	10.5
	78 to 144	87 × 64 to 142 × 91	12	14	10.5
5 × 1	36 to 72	60 × 46 to 81 × 59	20	22	
	78 to 144	87 × 64 to 142 × 91	20	22	

[1] Fabricate annular, helical and semi-corrugated type coupling bands from the same metal as the connecting pipe. Provide coupling bands not more than 3 nominal sheet thicknesses thinner than the thickness of the pipe to be connected, and no thinner than 0.052 inch for steel or 0.048 inch for aluminum. Fasten coupling bands with the following diameter of bolt:
⅜" for 18" round culvert (21" × 15" pipe arch) or less
½" for 21" round culvert (24" × 18" pipe arch) or more

[2] For helically corrugated pipe with rerolled ends, the nominal corrugations size refers to the dimension of the end corrugation in the pipe.

[3] Use annular corrugated bands with pipes having annular corrugations or with helical pipe having rerolled end to form annular corrugations. A 10.5 inch band is acceptable on pipe ends rerolled with 2⅔" × ½" corrugations. A 12 inch band is acceptable on pipe ends rerolled with 3" × 1" pipe corrugations.

[4] Use helical corrugated bands with pipes having helically corrugated ends.

[5] The minimum band widths shown for 3" × 1" and 5" × 1" corrugated sizes apply to 2⅔" × ½" corrugations on rerolled pipe ends.

[6] Smooth sleeve-type couplers and flat bands may be used for pipe diameters of 12" or less. Use a matching metal having a nominal thickness of not less than 0.040 inch for steel, or 0.036 inch for aluminum, or a plastic with an equivalent strength to metal.

NOTE:

1. Watertight pipe joints are not required unless specified in the Special Contract Requirements.
2. Other types of coupling bands or fastening devices that comply with the joint performance criteria of AASHTO Standard specifications for Highway Bridges, Division II Section 26 may be used.

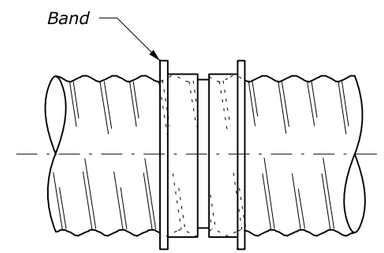

SLEEVE JOINT

Smoother sleeve with center stop.
Stab type joint

SMOOTH SLEEVE BAND

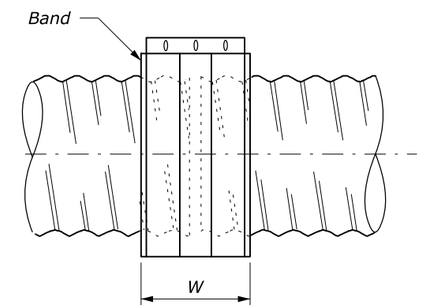

FLAT BAND

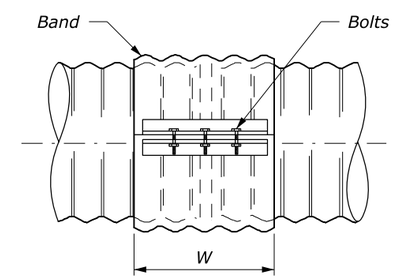

SIDE VIEW

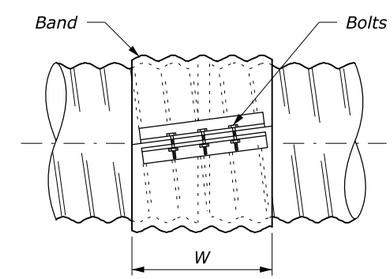

SIDE VIEW

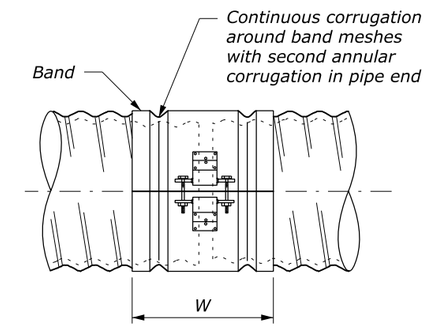

SIDE VIEW

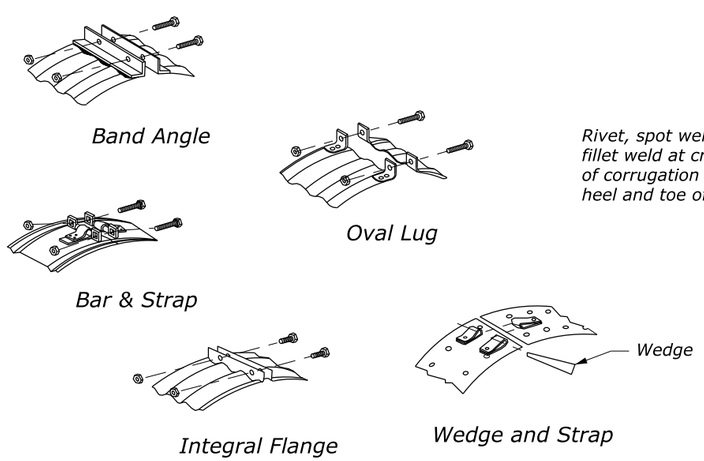

STANDARD BAND CONNECTIONS

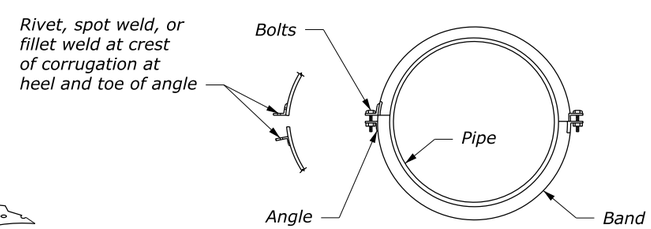

END VIEW

Second angle connection optional to 42" diameter, required above 42" diameter

ANNULAR BAND

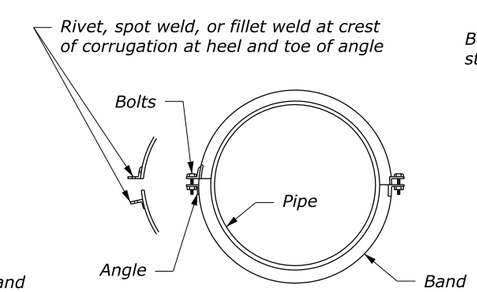

END VIEW

Second angle connection optional to 42" diameter, required above 42" diameter

HELICAL BAND

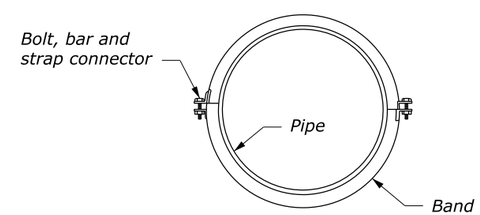

END VIEW

SEMI-CORRUGATED BAND

NO SCALE

U.S. DEPARTMENT OF TRANSPORTATION
FEDERAL HIGHWAY ADMINISTRATION
FEDERAL LANDS HIGHWAY

U.S. CUSTOMARY STANDARD

METAL PIPE CULVERT COUPLING BAND

STANDARD APPROVED FOR USE 12/1993
REVISED: 4/1994 6/2005

STANDARD 602-2

2 September 2015 11:30 AM c:\myfiles\pw_production\dms52075\Std602-2.dgn [USC]

STATE	PROJECT	SHEET NUMBER

COUPLING BANDS FOR METAL PIPE CULVERT [1]

CORRUGATION SIZE [2]	ROUND PIPE DIAMETER	PIPE ARCH SPAN × RISE	MINIMUM BAND WIDTH		
			ANNULAR CORRUGATED BANDS [3]	HELICALLY CORRUGATED BANDS [4]	SEMI-CORRUGATED BANDS [5]
38 × 6.5	underdrain [6]	-	265	180	265
68 × 13	300 to 900	430 × 330 to 1060 × 740	180	300	
	1050 to 1800	1240 × 840 to 2100 × 1450	265	300	
	1950 to 2100	-	265	300	265
75 × 25	900 to 1800	1520 × 1170 to 2050 × 1500	300	350	265
	1950 to 3600	2200 × 1620 to 3600 × 2320	300	350	265
125 × 25	900 to 1800	1520 × 1170 to 2050 × 1500	500	560	
	1950 to 3600	2200 × 1620 to 3600 × 2320	500	560	

[1] Fabricate annular, helical and semi-corrugated type coupling bands from the same metal as the connecting pipe. Provide coupling bands not more than 3 nominal sheet thicknesses thinner than the thickness of the pipe to be connected, and no thinner than 1.32 mm for steel or 1.2 mm for aluminum. Fasten coupling bands with the following diameter of bolt:
M10 for 450 round culvert (530 × 380 pipe arch) or less
M12 for 525 round culvert (610 × 460 pipe arch) or more

[2] For helically corrugated pipe with rerolled ends, the nominal corrugations size refers to the dimension of the end corrugation in the pipe.

[3] Use annular corrugated bands with pipes having annular corrugations or with helical pipe having rerolled end to form annular corrugations. A 265 mm band is acceptable on pipe ends rerolled with 68 × 13 corrugations. A 300 mm band is acceptable on pipe ends rerolled with 75 × 25 pipe corrugations.

[4] Use helical corrugated bands with pipes having helically corrugated ends.

[5] The minimum band widths shown for 75 × 25 and 125 × 25 corrugated sizes apply to 68 × 13 corrugations on rerolled pipe ends.

[6] Smooth sleeve-type couplers and flat bands may be used for pipe diameters of 300 or less. Use a matching metal having a nominal thickness of not less than 1.02 mm for steel, or 0.91 mm for aluminum, or a plastic with an equivalent strength to metal.

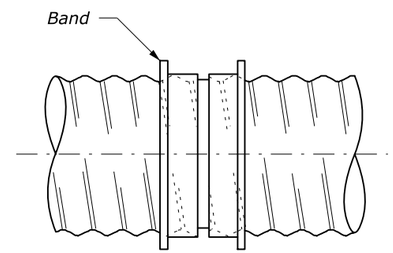

SLEEVE JOINT

Smoother sleeve with center stop.
Stab type joint

SMOOTH SLEEVE BAND

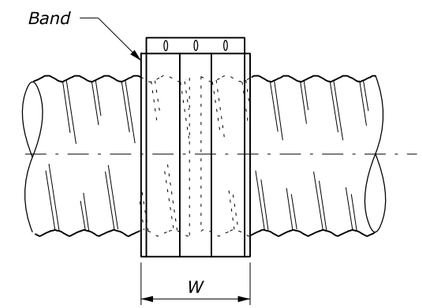

FLAT BAND

NOTE:

1. Watertight pipe joints are not required unless specified in the Special Contract Requirements.
2. Other types of coupling bands or fastening devices that comply with the joint performance criteria of AASHTO Standard specifications for Highway Bridges, Division II Section 26 may be used.
3. Dimensions without units are millimeters.

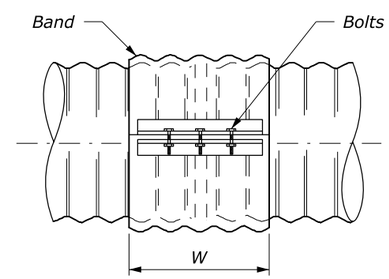

SIDE VIEW

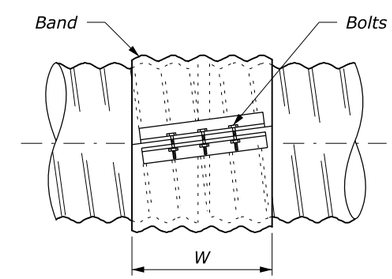

SIDE VIEW

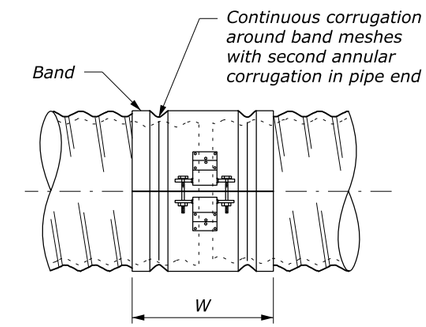

SIDE VIEW

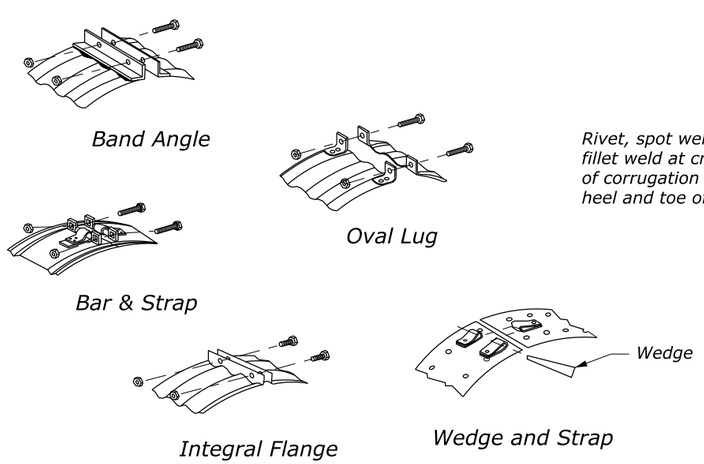

STANDARD BAND CONNECTIONS

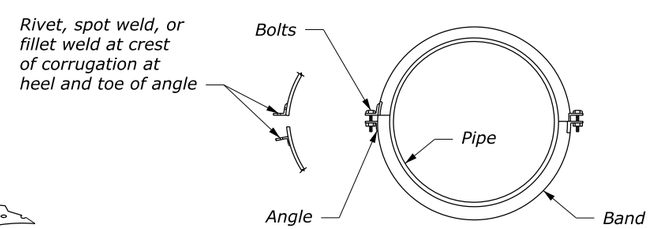

END VIEW

Second angle connection optional to 1050 diameter, required above 1050 diameter

ANNULAR BAND

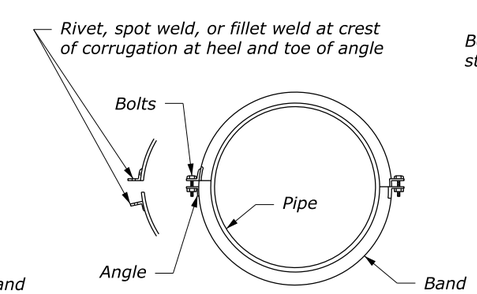

END VIEW

Second angle connection optional to 1050 diameter, required above 1050 diameter

HELICAL BAND

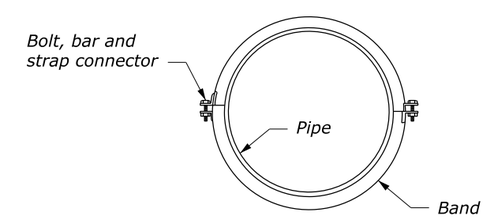

END VIEW

SEMI-CORRUGATED BAND

NO SCALE

U.S. DEPARTMENT OF TRANSPORTATION
FEDERAL HIGHWAY ADMINISTRATION
FEDERAL LANDS HIGHWAY

METRIC STANDARD

METAL PIPE CULVERT COUPLING BAND

STANDARD APPROVED FOR USE 3/1996
REVISED: 8/1997 6/2005

STANDARD
M602-2

2 September 2015 11:33 AM c:\myfiles\pw_production\dms52075\Std602-2.dgn [Metric]

STATE	PROJECT	SHEET NUMBER

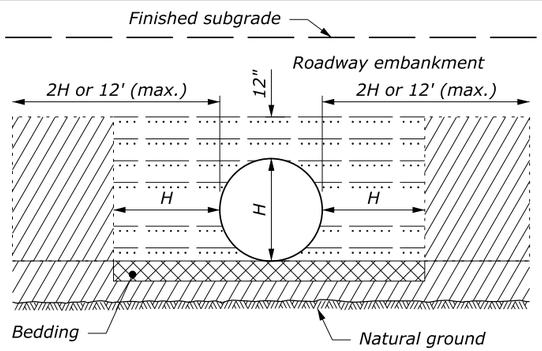

ABOVE NATURAL GROUND

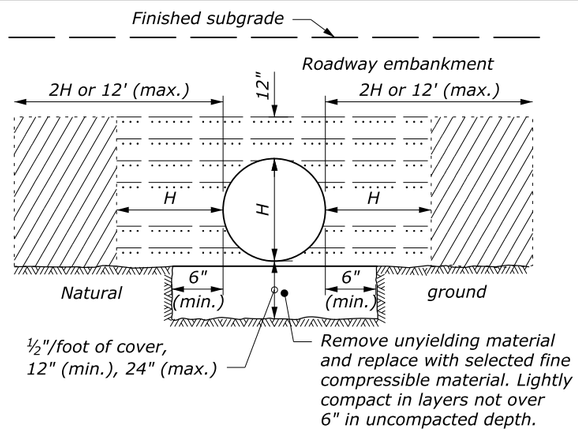

ON UNYIELDING MATERIAL

BEDDING DEPTH	
PIPE SIZE (H)	DEPTH
12" to 54"	4"
> 54"	6"

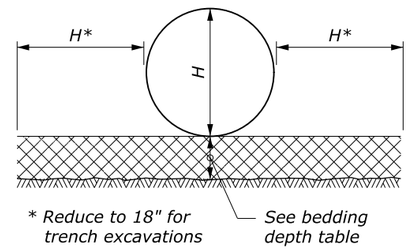

PIPE BEDDING

NOTE:

1. When directed, camber pipe culverts upward from a chord through the inlet and outlet inverts an ordinate amount equal to 1% of the pipe length. Develop camber on a parabolic curve. If the midpoint elevation on the parabolic curve as designed exceeds the elevation of the inlet invert, reduce the amount of camber or increase the pipe culvert gradient.
2. H equals the diameter of all round pipe culverts or the rise dimension of all pipe arch culverts.
3. See Section 704 for bedding and backfill requirements.

MINIMUM SPACING	
DIAMETER or SPAN	SPACING
UP to 48"	24"
48" and UP	Half diameter or span or 36", whichever is less

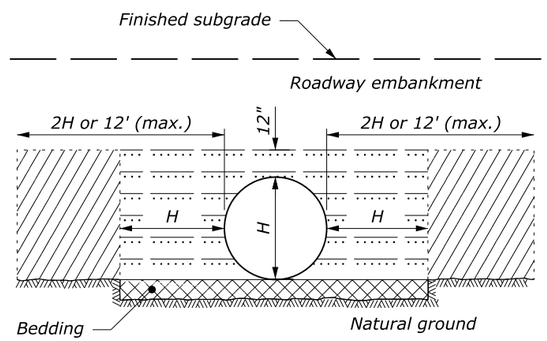

ON NATURAL GROUND

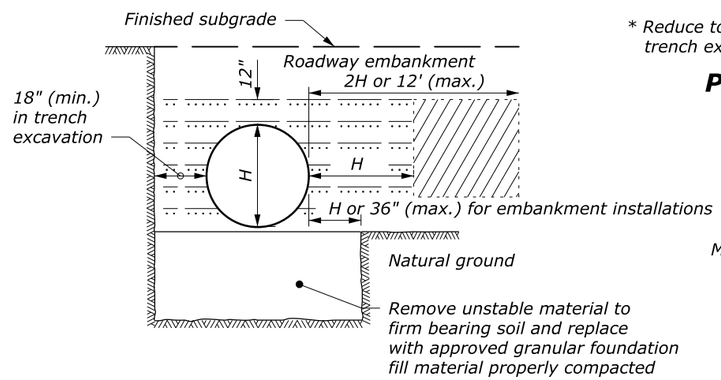

ON UNSTABLE MATERIAL

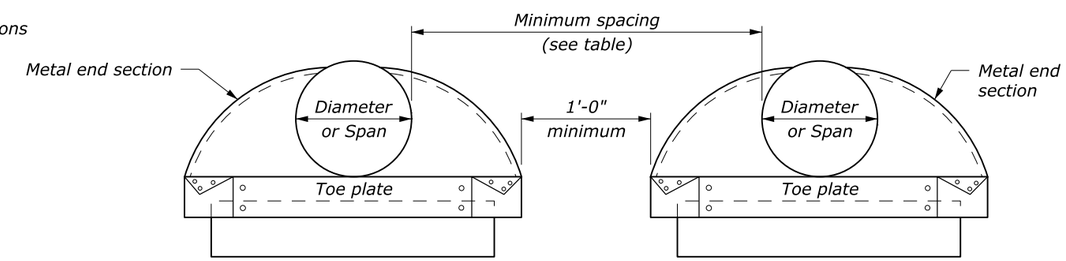

ELEVATION

MULTIPLE PIPE INSTALLATION

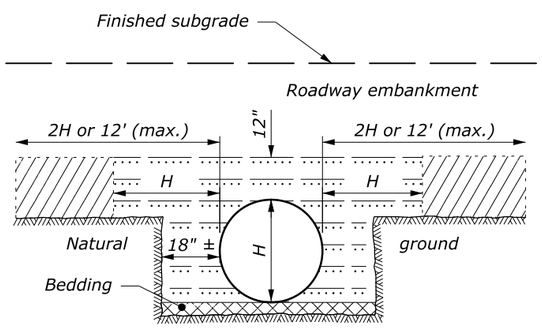

ABOVE AND BELOW NATURAL GROUND

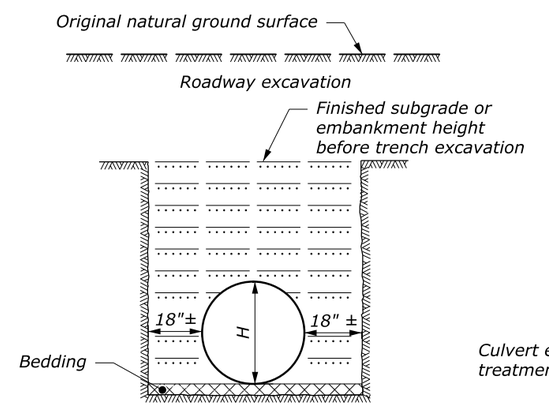

BELOW NATURAL GROUND OR TRENCH EXCAVATION IN EMBANKMENT

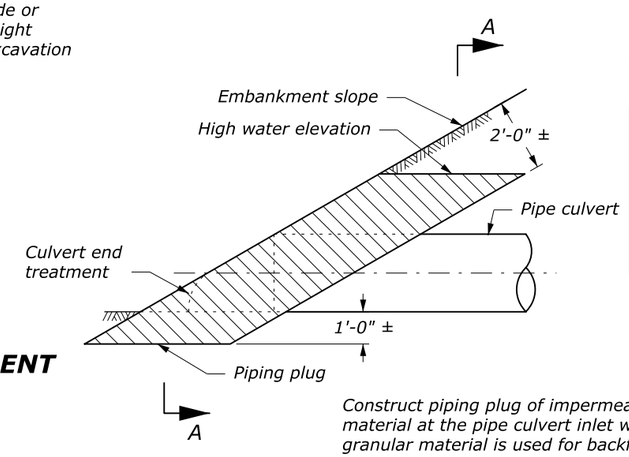

Construct piping plug of impermeable backfill material at the pipe culvert inlet where granular material is used for backfill. Width may be adjusted to tie into impervious material.

PIPING PLUG

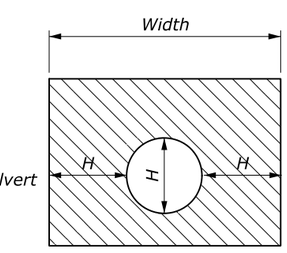

SECTION A-A

NO SCALE

LEGEND:

- Bedding material (uncompacted)
- Embankment material placed in layers not exceeding 6" compacted depth.
- Compacted backfill material placed in layers not exceeding 6" compacted depth; or lean concrete backfill in accordance with Section 614.
- Impermeable backfill material.

U.S. DEPARTMENT OF TRANSPORTATION
FEDERAL HIGHWAY ADMINISTRATION
FEDERAL LANDS HIGHWAY

U.S. CUSTOMARY STANDARD

METAL AND PLASTIC PIPE CULVERT BEDDING

STANDARD APPROVED FOR USE 12/1993
REVISED: 4/1994 6/2005
DRAFT: 10/2017

STANDARD 602-3

24 February 2016 8:59 AM c:\myfiles\pw_production\d0243077\FLH-Cells.dgnlib [Border.US]

STATE	PROJECT	SHEET NUMBER

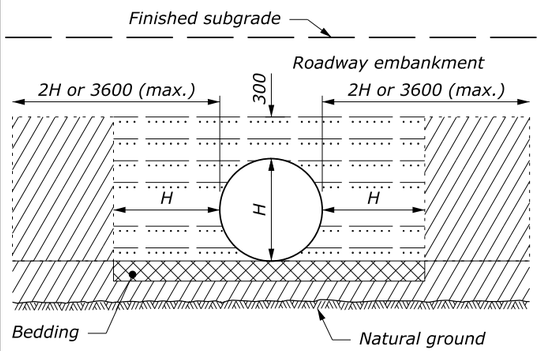

ABOVE NATURAL GROUND

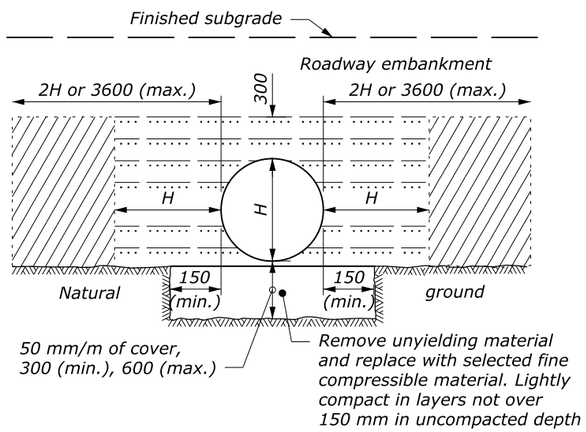

ON UNYIELDING MATERIAL

BEDDING DEPTH	
PIPE SIZE (H)	DEPTH
300 to 1350	100
> 1350	150

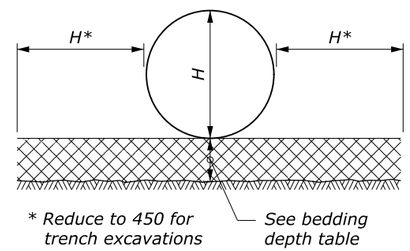

PIPE BEDDING

NOTE:

1. When directed, camber pipe culverts upward from a chord through the inlet and outlet inverts an ordinate amount equal to 1% of the pipe length. Develop camber on a parabolic curve. If the midpoint elevation on the parabolic curve as designed exceeds the elevation of the inlet invert, reduce the amount of camber or increase the pipe culvert gradient.
2. H equals the diameter of all round pipe culverts or the rise dimension of all pipe arch culverts.
3. See Section 704 for bedding and backfill requirements.
4. Dimensions without units are millimeters.

MINIMUM SPACING	
DIAMETER or SPAN	SPACING
UP to 1200	610
1200 and UP	Half diameter or span or 900, whichever is less

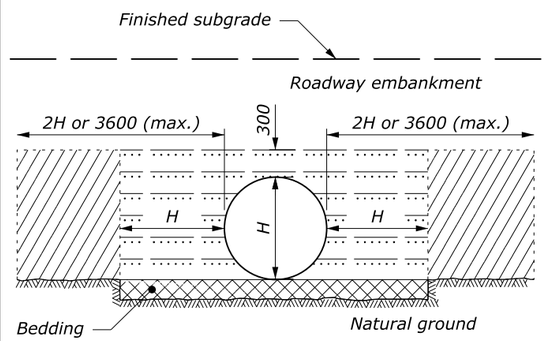

ON NATURAL GROUND

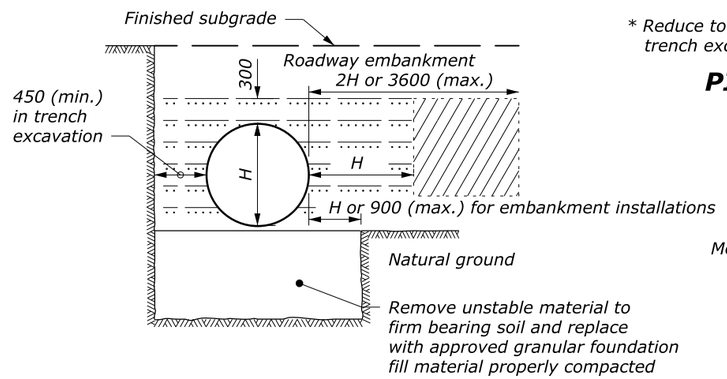

ON UNSTABLE MATERIAL

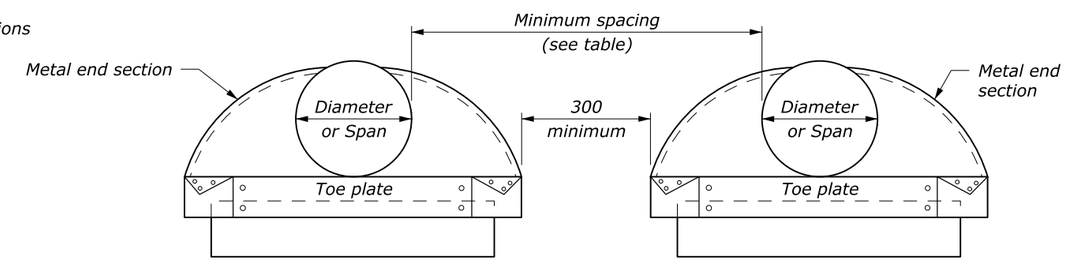

ELEVATION

MULTIPLE PIPE INSTALLATION

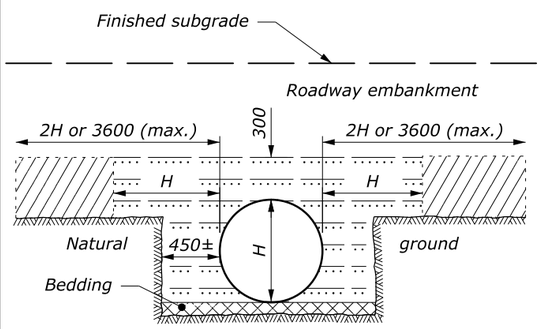

ABOVE AND BELOW NATURAL GROUND

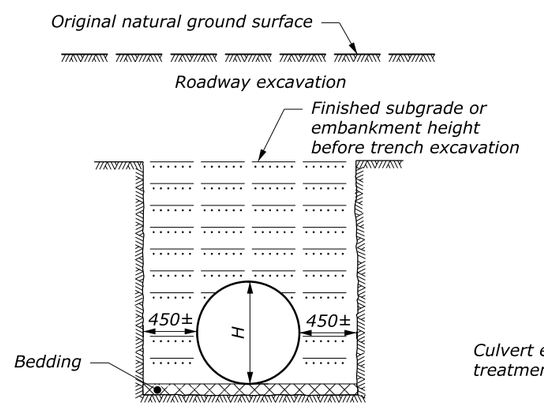

BELOW NATURAL GROUND OR TRENCH EXCAVATION IN EMBANKMENT

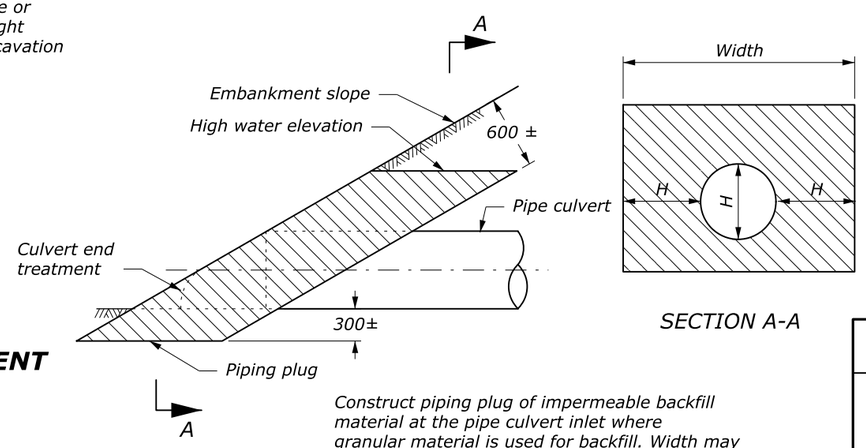

SECTION A-A

Construct piping plug of impermeable backfill material at the pipe culvert inlet where granular material is used for backfill. Width may be adjusted to tie into impervious material.

PIPING PLUG

NO SCALE

LEGEND:

- Bedding material (uncompacted)
- Embankment material placed in layers not exceeding 150 mm compacted depth.
- Compacted backfill material placed in layers not exceeding 150 mm compacted depth; or lean concrete backfill in accordance with Section 614.
- Impermeable backfill material.

U.S. DEPARTMENT OF TRANSPORTATION
FEDERAL HIGHWAY ADMINISTRATION
FEDERAL LANDS HIGHWAY

METRIC STANDARD

METAL AND PLASTIC PIPE CULVERT BEDDING

STANDARD APPROVED FOR USE 3/1996
REVISED: 12/1998 6/2005
DRAFT: 10/2017

STANDARD
M602-3

c:\myfiles\pw_production\dms00731\Std602-3.dgn [Metric]
24 February 2016 2:12 PM

STATE	PROJECT	SHEET NUMBER

END SECTIONS FOR ROUND PIPE CULVERT

PIPE SIZE DIAMETER INCHES	METAL THICKNESS STEEL INCHES	STEEL GAGE	ALUMINUM INCHES	ALUMINUM GAGE	DIMENSIONS INCHES A (min)	B (max)	H (min)	L (±2")	W (max)	SLOPE Approx.
12	0.064	16	0.060	16	5	7	6	21	44	2¼
15	0.064	16	0.060	16	6	8	6	26	52	2¼
18	0.064	16	0.060	16	7	10	6	31	58	2⅛
21	0.064	16	0.060	16	8	12	6	36	66	2⅛
24	0.064	16	0.060	16	9	13	6	41	72	2⅛
30	0.079	14	0.075	14	11	16	8	51	88	2⅛
36	0.079	14	0.075	14	13	19	9	60	105	2
42	0.109	12	0.105	12	15	25	10	69	122	2⅛
48	0.109	12	0.105	12	17	29	12	78	131	2
54	0.109	12	0.105	12	17	33	12	84	143	2
60	0.109	12	0.105	12	17	36	12	87	157	1⅞
66	0.109	12	0.105	12	17	39	12	87	162	1⅝
72	0.109	12	0.105	12	17	44	12	87	169	1½
78	0.109	12	0.105	12	17	48	12	87	178	1⅜
84	0.109	12	0.105	12	17	52	12	87	184	1⅓
90	0.109	12	0.105	12	17	58	12	87	188	1¼
96	0.109	12	0.105	12	17	58	12	87	197	1⅛

END SECTIONS FOR PIPE ARCH CULVERT

PIPE SIZE SPAN × RISE INCHES	EQUI-VALENT DIAM. (INCHES)	METAL THICKNESS STEEL INCHES	STEEL GAGE	ALUMINUM INCHES	ALUMINUM GAGE	DIMENSIONS INCHES A (min)	B (max)	H (min)	L (±2")	W (max)	SLOPE Approx.
17 × 13	15	0.064	16	0.060	16	7	9	6	19	30	2½
21 × 15	18	0.064	16	0.060	16	7	10	6	23	36	2½
24 × 18	21	0.064	16	0.060	16	8	12	6	28	42	2½
28 × 20	24	0.064	16	0.060	16	9	14	6	32	48	2½
35 × 24	30	0.079	14	0.075	14	10	16	8	39	60	2½
42 × 29	36	0.079	14	0.075	14	12	18	9	46	75	2½
49 × 33	42	0.109	12	0.105	12	13	21	12	53	85	2½
57 × 38	48	0.109	12	0.105	12	18	26	12	63	90	2½
60 × 46	54	0.109	12	0.105	12	18	34	12	70	102	2
64 × 43	54	0.109	12	0.105	12	18	30	12	70	102	2
66 × 51	60	0.109	12	0.105	12	18	33	12	77	116	1½
71 × 47	60	0.109	12	0.105	12	18	33	12	77	114	1½
73 × 55	66	0.109	12	0.105	12	18	36	12	77	126	1½
77 × 52	66	0.109	12	0.105	12	18	36	12	77	126	1½
81 × 59	72	0.109	12	0.105	12	18	39	12	77	138	1½
83 × 57	72	0.109	12	0.105	12	18	39	12	77	138	1½
87 × 63	78	0.109	12	0.105	12	20	38	12	77	148	1½
95 × 67	84	0.109	12	0.105	12	20	34	12	87	162	1½
103 × 71	90	0.109	12	0.105	12	20	38	12	87	174	1½
112 × 75	96	0.109	12	0.105	12	20	40	12	87	174	1½

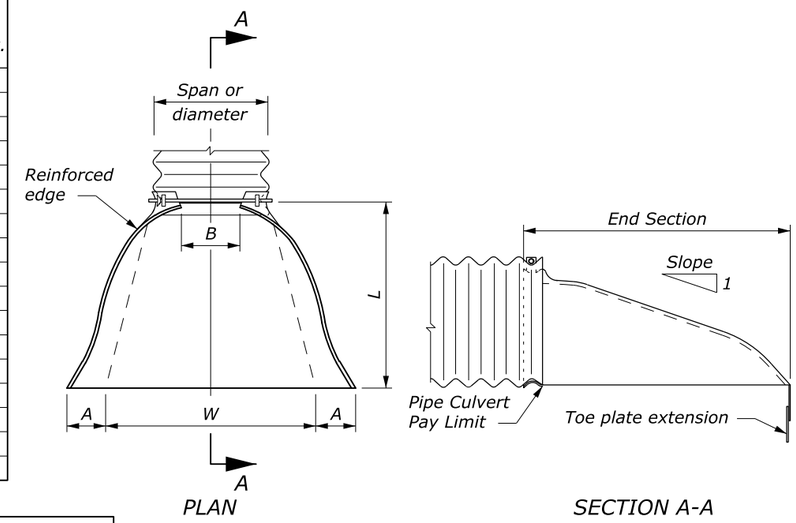

PLAN

SECTION A-A

ROUND OR PIPE ARCH CULVERT

NOTE:

1. Variations in design and dimensions are permitted to allow for manufacturer's standards.
2. Fabricate the diameter of the end section of Design B to match the inside diameter of the concrete pipe culvert.
3. Design C may be used in lieu of design A for all metal pipe culvert sizes. Coupling bands may be any acceptable type for the pipe culvert specified.
4. Fabricate multiple piece bodies with lap seams tightly joined by ⅜" rivets or bolts. Fabricate end section center panels for 60" and larger diameter pipe and equivalent pipe arch from 0.138 inch steel or 0.135 inch aluminum.
5. On end section center panels for 66" and larger equivalent pipe arch provide 2½" × 2½" × ¼" angle reinforcement bolted or riveted under the center panel seam.
6. Supplement the reinforced edges of end sections for 60" and larger diameter pipe and 66" and larger equivalent pipe arch with 2½" × 2½" × ¼" stiffener angles attached with bolts or rivets.
7. Fabricate connector section, corner plate and toe plate extensions from the same metal thickness as the panel body. Use toe plate extension where shown on the plans.
8. Warp embankment slopes to match the slope of the flared end sections.

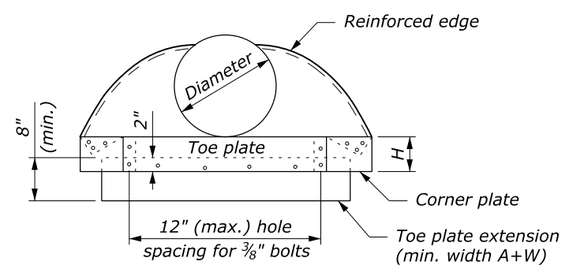

ELEVATION

ROUND PIPE CULVERT

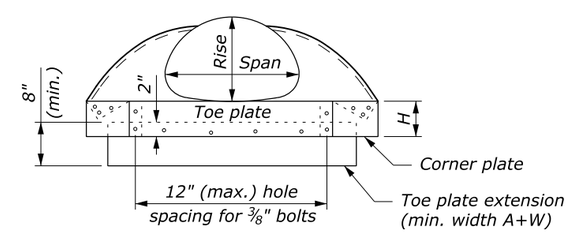

ELEVATION

PIPE ARCH CULVERT

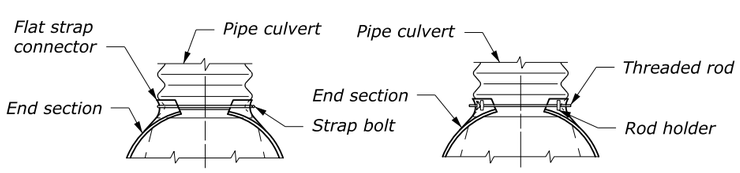

For 12" thru 24" round pipe and 17" × 13" thru 28" × 20" pipe arch

For 30" thru 60" round pipe and 35" × 24" thru 66" × 51" pipe arch

DESIGN A
CONNECTION TO ANNULAR CORRUGATED METAL PIPE

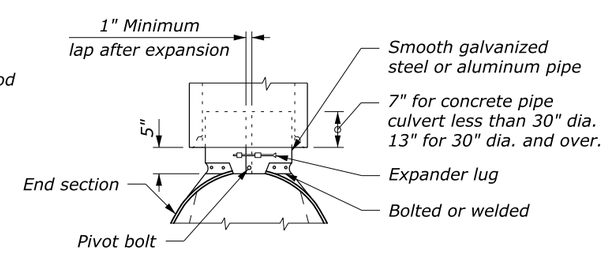

DESIGN B
CONNECTION TO CONCRETE PIPE INLET END

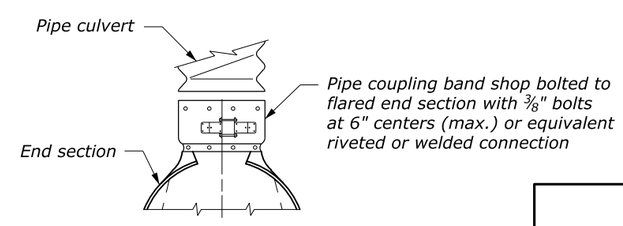

For all sizes of round pipe and pipe arch

DESIGN C
CONNECTION TO METAL PIPE OR OUTLET END OF CONCRETE PIPE

NO SCALE

U.S. DEPARTMENT OF TRANSPORTATION
FEDERAL HIGHWAY ADMINISTRATION
FEDERAL LANDS HIGHWAY

U.S. CUSTOMARY STANDARD

METAL END SECTIONS

STANDARD APPROVED FOR USE 12/1993
REVISED: 4/1994 6/2005
DRAFT: 10/2007

STANDARD 602-4

3 September 2015 11:06 AM c:\myfiles\pw_production\dms52075\Std602-4.dgn [USC]

STATE	PROJECT	SHEET NUMBER

END SECTIONS FOR ROUND PIPE CULVERT

PIPE SIZE DIAMETER	METAL THICKNESS		DIMENSIONS					SLOPE Approx.
	STEEL	ALUMINUM	A (min)	B (max)	H (min)	L (±50)	W (max)	
300	1.63	1.52	125	175	150	525	1100	2¼
375	1.63	1.52	150	200	150	650	1300	2¼
450	1.63	1.52	175	250	150	775	1450	2⅛
525	1.63	1.52	200	300	150	900	1650	2⅛
600	1.63	1.52	225	325	150	1025	1800	2⅛
750	2.01	1.91	275	400	200	1275	2200	2⅛
900	2.01	1.91	325	475	225	1500	2625	2
1050	2.77	2.67	375	625	250	1725	3050	2⅛
1200	2.77	2.67	425	725	300	1950	3275	2
1350	2.77	2.67	425	825	300	2100	3575	2
1500	2.77	2.67	425	900	300	2175	3925	1⅞
1650	2.77	2.67	425	975	300	2175	4050	1⅝
1800	2.77	2.67	425	1100	300	2175	4225	1½
1950	2.77	2.67	425	1200	300	2175	4450	1⅜
2100	2.77	2.67	425	1300	300	2175	4600	1⅓
2250	2.77	2.67	425	1450	300	2175	4700	1¼
2400	2.77	2.67	425	1450	300	2175	4925	1⅛

END SECTIONS FOR PIPE ARCH CULVERT

PIPE SIZE SPAN × RISE	EQUI-VALENT DIAM.	METAL THICKNESS		DIMENSIONS					SLOPE Approx.
		STEEL	ALUMINUM	A (min)	B (max)	H (min)	L (±50)	W (max)	
430 × 330	375	1.63	1.52	175	225	150	475	750	2½
530 × 380	450	1.63	1.52	175	250	150	575	900	2½
610 × 460	525	1.63	1.52	200	300	150	700	1050	2½
710 × 510	600	1.63	1.52	225	350	150	800	1200	2½
890 × 610	750	2.01	1.91	250	400	200	975	1500	2½
1070 × 740	900	2.01	1.91	300	450	225	1150	1875	2½
1240 × 840	1050	2.77	2.67	325	525	300	1325	2125	2½
1450 × 970	1200	2.77	2.67	450	650	300	1575	2250	2½
1520 × 1170	1350	2.77	2.67	450	850	300	1750	2550	2
1630 × 1090	1350	2.77	2.67	450	750	300	1750	2550	2
1680 × 1300	1500	2.77	2.67	450	825	300	1925	2900	1½
1800 × 1190	1500	2.77	2.67	450	825	300	1925	2850	1½
1850 × 1400	1650	2.77	2.67	450	900	300	1925	3150	1½
1960 × 1320	1650	2.77	2.67	450	900	300	1925	3150	1½
2060 × 1500	1800	2.77	2.67	450	975	300	1925	3450	1½
2110 × 1450	1800	2.77	2.67	450	975	300	1925	3450	1½
2210 × 1600	1950	2.77	2.67	500	950	300	1925	3700	1½
2410 × 1700	2100	2.77	2.67	500	850	300	2175	4050	1½
2620 × 1800	2250	2.77	2.67	500	950	300	2175	4350	1½
2840 × 1910	2400	2.77	2.67	500	1000	300	2175	4350	1½

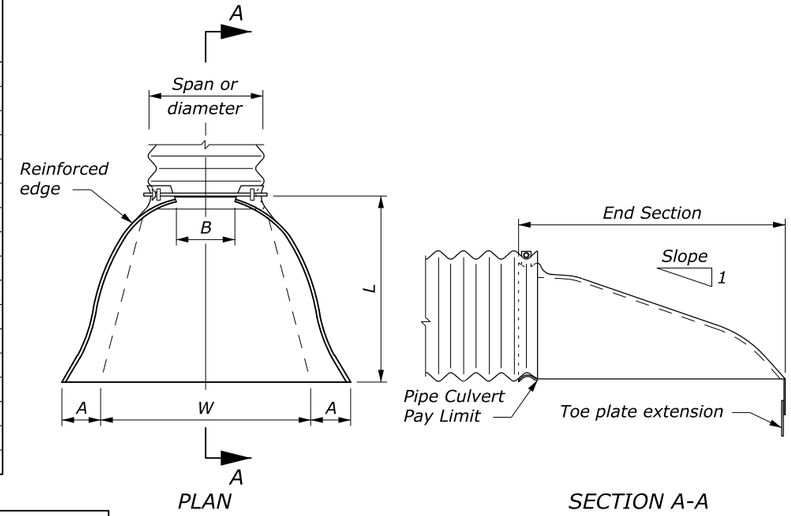

ROUND OR PIPE ARCH CULVERT

NOTE:

1. Variations in design and dimensions are permitted to allow for manufacturer's standards.
2. Fabricate the diameter of the end section of Design B to match the inside diameter of the concrete pipe culvert.
3. Design C may be used in lieu of design A for all metal pipe culvert sizes. Coupling bands may be any acceptable type for the pipe culvert specified.
4. Fabricate multiple piece bodies with lap seams tightly joined by M10 rivets or bolts. Fabricate end section center panels for 1500 mm and larger diameter pipe and equivalent pipe arch from 3.51 mm steel or 3.43 mm aluminum.
5. On end section center panels for 1650 mm and larger equivalent pipe arch provide 64 × 64 × 6.4 angle reinforcement bolted or riveted under the center panel seam.
6. Supplement the reinforced edges of end sections for 1500 mm and larger diameter pipe and 1650 mm and larger equivalent pipe arch with 51 × 51 × 6.4 stiffener angles attached with bolts or rivets.
7. Fabricate connector section, corner plate and toe plate extensions from the same metal thickness as the panel body. Use toe plate extension where shown on the plans.
8. Warp embankment slopes to match the slope of the flared end sections.
9. Dimensions without units are millimeters.

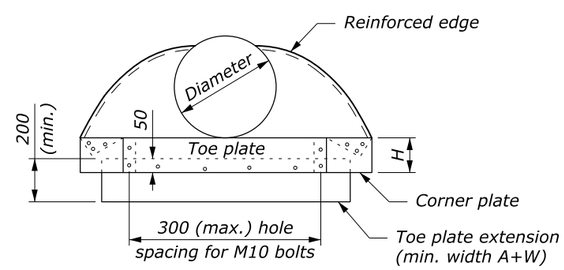

ELEVATION

ROUND PIPE CULVERT

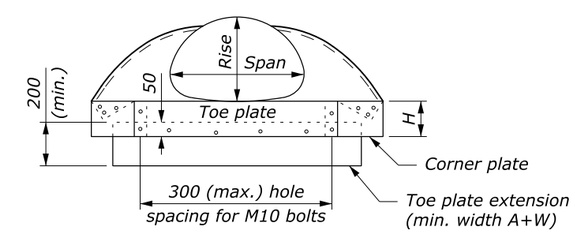

ELEVATION

PIPE ARCH CULVERT

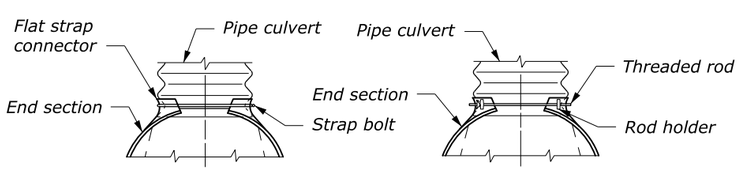

For 300 thru 600 mm round pipe and 430 × 330 mm thru 710 × 510 mm pipe arch

For 750 thru 1500 mm round pipe and 890 × 610 mm thru 1670 × 1290 mm pipe arch

DESIGN A
CONNECTION TO ANNULAR CORRUGATED METAL PIPE

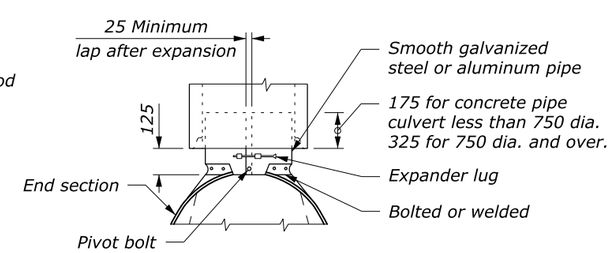

DESIGN B
CONNECTION TO CONCRETE PIPE INLET END

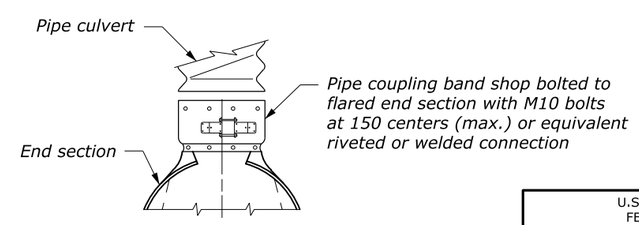

For all sizes of round pipe and pipe arch

DESIGN C
CONNECTION TO METAL PIPE OR OUTLET END OF CONCRETE PIPE

NO SCALE

U.S. DEPARTMENT OF TRANSPORTATION
FEDERAL HIGHWAY ADMINISTRATION
FEDERAL LANDS HIGHWAY

METRIC STANDARD

METAL END SECTIONS

STANDARD APPROVED FOR USE 3/1996

REVISED: 8/1997 6/2005
DRAFT: 10/2007

STANDARD
M602-4

3 September 2015 11:13 AM c:\myfiles\pw_production\dms52075\Std602-4.dgn [Metric]

STATE	PROJECT	SHEET NUMBER

POLYETHYLENE (PE) PLASTIC ROUND PIPE CULVERT

FILL HEIGHT TABLE AND MINIMUM CELL CLASSIFICATION NUMBER PER ASTM D 3350

SMOOTH WALL (SOLID WALL)

PIPE SIZE DIAMETER INCHES	MINIMUM COVER INCHES	CELL CLASSIFICATION NUMBER 335434C — MINIMUM WALL THICKNESS (INCHES) 0.607	0.857	0.923	1.154	1.385	1.292	1.477
		MAXIMUM FILL HEIGHT (FEET)						
12	12	57						
18	12		52					
24	12			38				
30	12				38			
36	12					38		
42	12						27	
48	12							27

CORRUGATED

PIPE SIZE DIAMETER INCHES	MINIMUM COVER INCHES	CELL CLASS. NO. 435400C MAXIMUM FILL HEIGHT (FEET)
12	12	10
15	12	10
18	12	10
24	12	10
30	12	10
36	12	10

RIBBED

PIPE SIZE DIAMETER INCHES	MINIMUM COVER INCHES	CELL CLASS. NO. 334433C	CELL CLASS. NO. 335434C
		MAXIMUM FILL HEIGHT (FEET)	
18	12	18	24
24	12	22	28
30	12	22	28
36	12	25	31
42	12	21	27
48	12	21	26

NOTE:

1. When directed, camber pipe culverts upward from a chord through the inlet and outlet inverts an ordinate amount equal to 1% of the pipe length. Develop camber on a parabolic curve. If the midpoint elevation on the parabolic curve as designed exceeds the elevation of the inlet invert, reduce the amount of camber or increase the pipe culvert gradient.

2. Measure minimum cover from the top of the pipe culvert to the subgrade for flexible pavements, and to the top of the pavement for rigid pavements. Measure maximum fill height from the top of the pipe to the top of the pavement for both flexible and rigid pavement.

POLYVINYL CHLORIDE (PVC) PLASTIC ROUND PIPE CULVERT

FILL HEIGHT TABLE AND MINIMUM CELL CLASSIFICATION NUMBER PER ASTM D 1784

SMOOTH WALL (SOLID WALL)

PIPE SIZE DIAMETER INCHES	MINIMUM COVER INCHES	CELL CLASS. NO. 12454 — MINIMUM WALL THICKNESS (INCHES) 0.358	0.438	CELL CLASS. NO. 12364 — 0.358	0.438
		MAXIMUM FILL HEIGHT (FEET)			
12	12	65		69	
15	12		62		66

RIBBED

PIPE SIZE DIAMETER INCHES	MINIMUM COVER INCHES	CELL CLASS. NO. 12454C	CELL CLASS. NO. 12364C
		MAXIMUM FILL HEIGHT (FEET)	
12	12	37	26
15	12	32	22
18	12	33	23
24	12	29	21
30	12	28	20
36	12	27	19
42	12	26	18
48	12	24	17

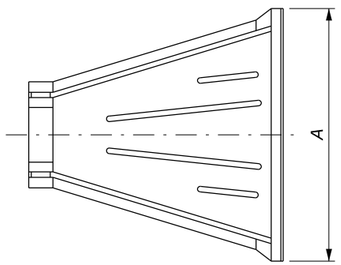

TOP

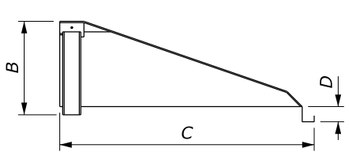

SIDE

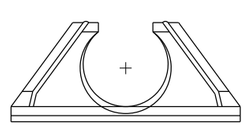

FRONT

END SECTION DIMENSIONS

PIPE SIZE DIAMETER INCHES	DIMENSIONS INCHES A	B	C	D
12	42	14.5	33	6
15	46	24.5	45.5	6
18	54	29	55	6
24	64	37	65	6
30	88	36	63.5	6
36	88	43	66.5	6

PLASTIC PIPE END SECTION

NO SCALE

U.S. DEPARTMENT OF TRANSPORTATION
FEDERAL HIGHWAY ADMINISTRATION
FEDERAL LANDS HIGHWAY

U.S. CUSTOMARY STANDARD

PLASTIC PIPE CULVERT

STANDARD APPROVED FOR USE 12/1993

REVISED: 4/1994 6/2005
DRAFT: 2/2009

STANDARD 602-5

3 September 2015 2:45 PM C:\WyFiles\pw_production\dms52075\Std602-5.dgn [USC]

STATE	PROJECT	SHEET NUMBER

POLYETHYLENE (PE) PLASTIC ROUND PIPE CULVERT

FILL HEIGHT TABLE AND MINIMUM CELL CLASSIFICATION NUMBER PER ASTM D 3350

SMOOTH WALL (SOLID WALL)

PIPE SIZE DIAMETER	MINIMUM COVER	CELL CLASSIFICATION NUMBER 335434C						
		MINIMUM WALL THICKNESS						
		15.4	21.7	23.4	29.3	35.1	32.8	37.5
		MAXIMUM FILL HEIGHT (METERS)						
300	300	17.5						
450	300		16					
600	300			11.5				
750	300				11.5			
900	300					11.5		
1050	300						8.0	
1200	300							8.0

CORRUGATED

PIPE SIZE DIAMETER	MINIMUM COVER	CELL CLASS. NO. 435400C
		MAXIMUM FILL HEIGHT (METERS)
300	300	3.0
375	300	3.0
450	300	3.0
600	300	3.0
750	300	3.0
900	300	3.0

RIBBED

PIPE SIZE DIAMETER	MINIMUM COVER	CELL CLASS. NO. 334433C	CELL CLASS. NO. 335434C
		MAXIMUM FILL HEIGHT (METERS)	
450	300	5.5	7.5
600	300	6.5	8.5
750	300	6.5	8.5
900	300	7.5	9.5
1050	300	6.5	8.0
1200	300	6.5	8.0

NOTE:

1. When directed, camber pipe culverts upward from a chord through the inlet and outlet inverts an ordinate amount equal to 1% of the pipe length. Develop camber on a parabolic curve. If the midpoint elevation on the parabolic curve as designed exceeds the elevation of the inlet invert, reduce the amount of camber or increase the pipe culvert gradient.
2. Measure minimum cover from the top of the pipe culvert to the subgrade for flexible pavements, and to the top of the pavement for rigid pavements. Measure maximum fill height from the top of the pipe to the top of the pavement for both flexible and rigid pavement.
3. Dimensions without units are millimeters.

POLYVINYL CHLORIDE (PVC) PLASTIC ROUND PIPE CULVERT

FILL HEIGHT TABLE AND MINIMUM CELL CLASSIFICATION NUMBER PER ASTM D 1784

SMOOTH WALL (SOLID WALL)

PIPE SIZE DIAMETER	MINIMUM COVER	CELL CLASS. NO. 12454		CELL CLASS. NO. 12364	
		MINIMUM WALL THICKNESS			
		9.1	11.1	9.1	11.1
		MAXIMUM FILL HEIGHT (METERS)			
300	300	20		21	
375	300		19		20

RIBBED

PIPE SIZE DIAMETER	MINIMUM COVER	CELL CLASS. NO. 12454C	CELL CLASS. NO. 12364C
		MAXIMUM FILL HEIGHT (METERS)	
300	300	11.0	8.0
375	300	9.5	6.5
450	300	10.0	7.0
600	300	9.0	6.5
750	300	8.5	6.0
900	300	8.5	6.0
1050	300	8.0	5.5
1200	300	7.5	5.5

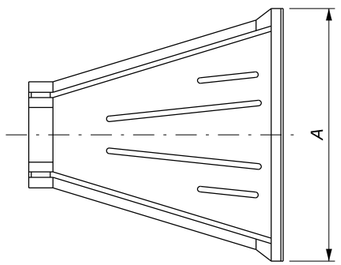

TOP

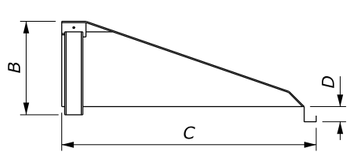

SIDE

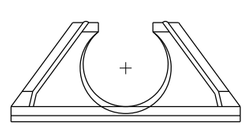

FRONT

END SECTION DIMENSIONS

PIPE SIZE DIAMETER	DIMENSIONS			
	A	B	C	D
300	1065	370	840	150
375	1170	620	1155	150
450	1370	735	1395	150
600	1625	940	1650	150
750	2235	915	1615	150
900	2235	1090	1690	150

PLASTIC PIPE END SECTION

NO SCALE

U.S. DEPARTMENT OF TRANSPORTATION
FEDERAL HIGHWAY ADMINISTRATION
FEDERAL LANDS HIGHWAY

METRIC STANDARD

PLASTIC PIPE CULVERT

STANDARD APPROVED FOR USE 3/1996
REVISED: 6/2005
DRAFT: 2/2009

STANDARD
M602-5

3 September 2015 2:47 PM C:\MyFiles\pw_production\dms52075\Std602-5.dgn [Metric]

STATE	PROJECT	SHEET NUMBER

NOTE:

1. D equals the diameter of all round pipe or the rise dimension of all pipe arch culverts.

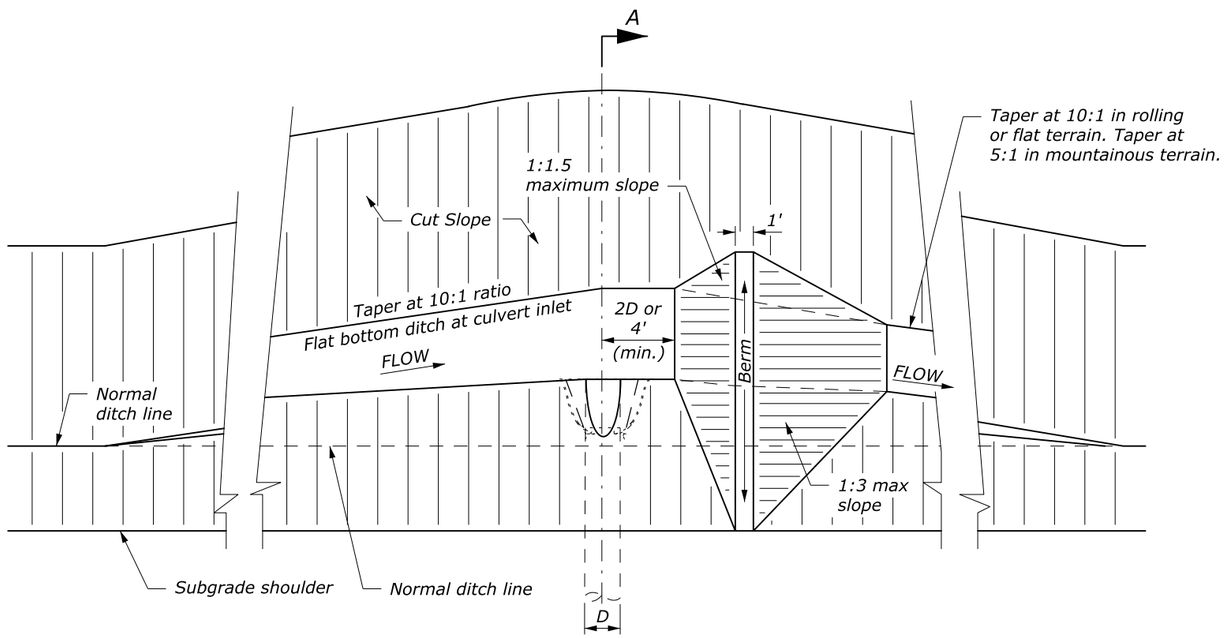

A

PLAN

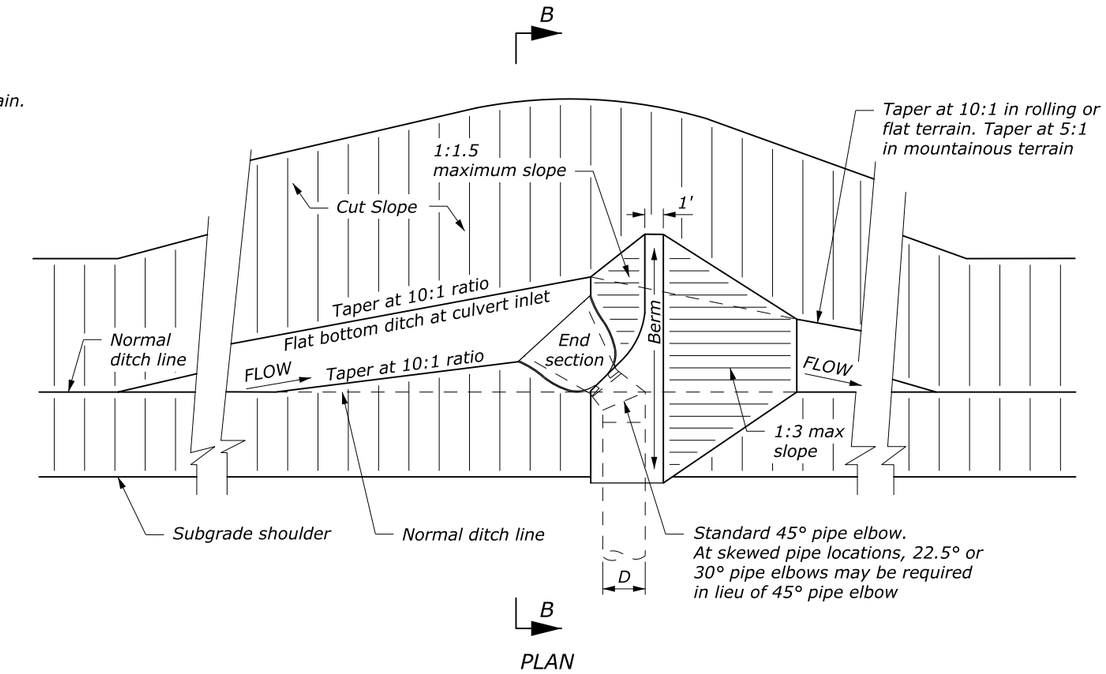

B

PLAN

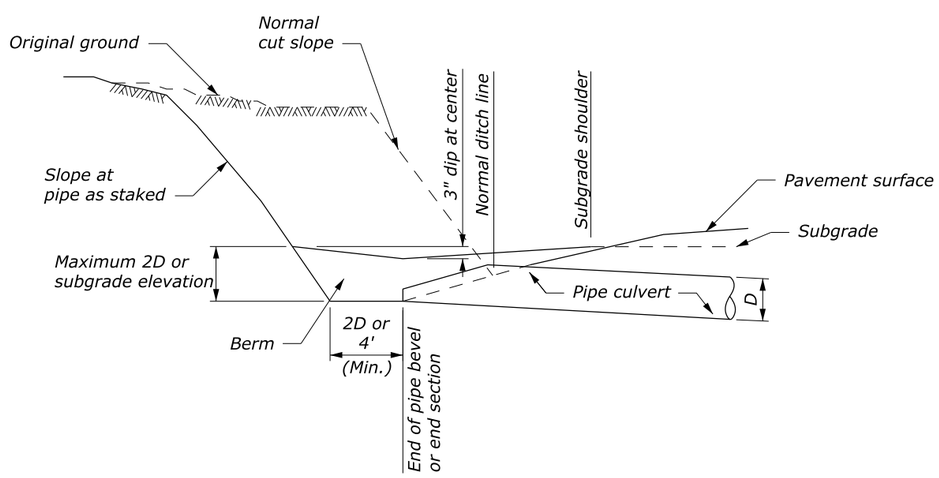

SECTION A-A

TYPE I

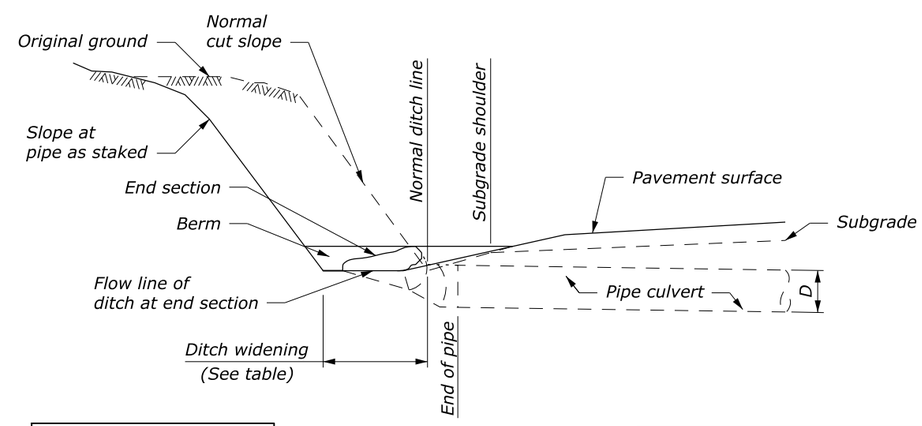

DITCH WIDENING	
PIPE SIZE (D)	WIDENING
18"	5'
24"	6'
30"	7'

SECTION B-B

TYPE II

NO SCALE

U.S. DEPARTMENT OF TRANSPORTATION
FEDERAL HIGHWAY ADMINISTRATION
FEDERAL LANDS HIGHWAY

U.S. CUSTOMARY STANDARD

PIPE CULVERT INLET TREATMENT IN CUT SLOPES

STANDARD APPROVED FOR USE 12/1993

REVISED: 4/1994 6/2005

STANDARD 602-6

3 December 2015 8:11 AM c:\myfiles\pw_production\dms52075\Std602-6.dgn [USC]

STATE	PROJECT	SHEET NUMBER

NOTE:

1. D equals the diameter of all round pipe or the rise dimension of all pipe arch culverts.
2. Dimensions without units are millimeters.

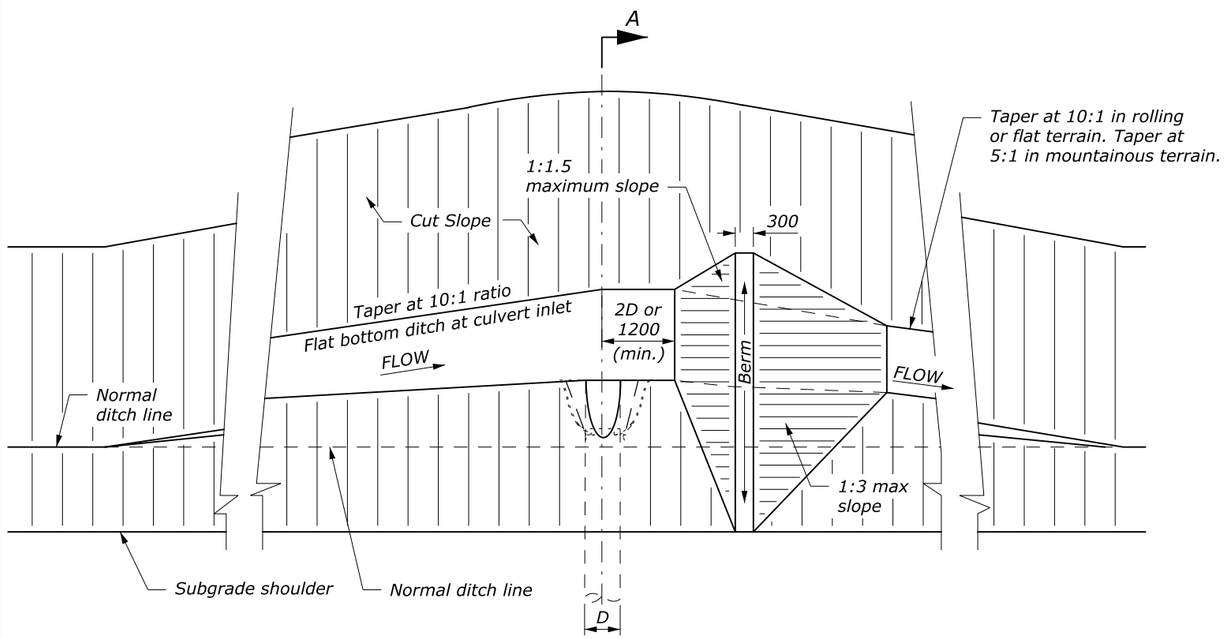

A

PLAN

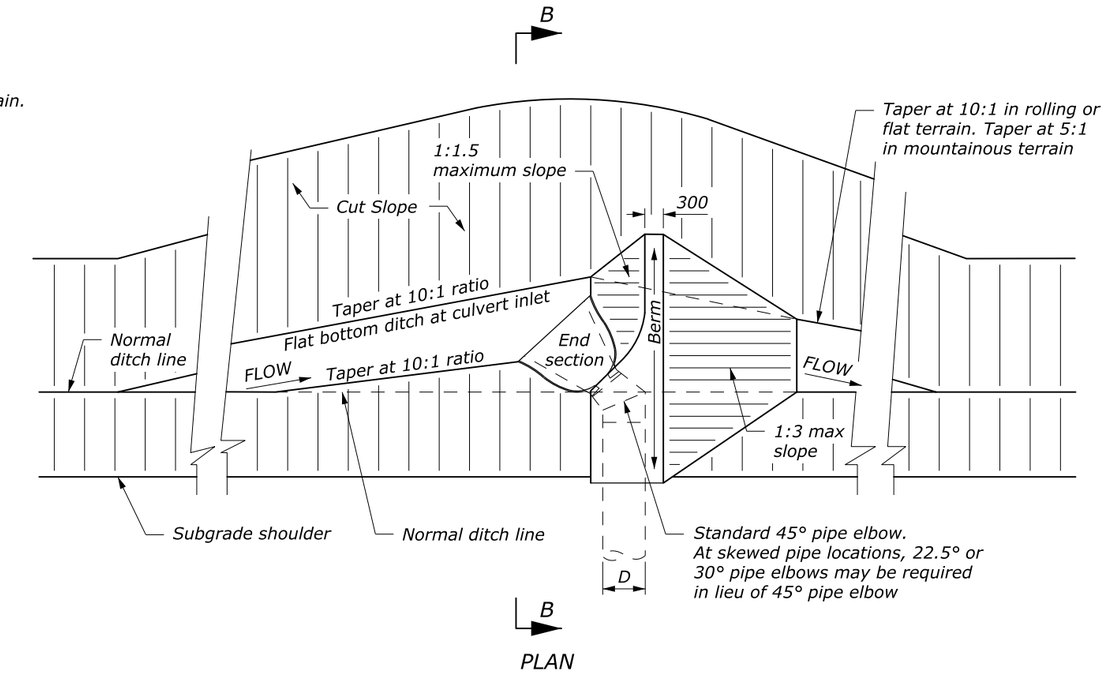

B

PLAN

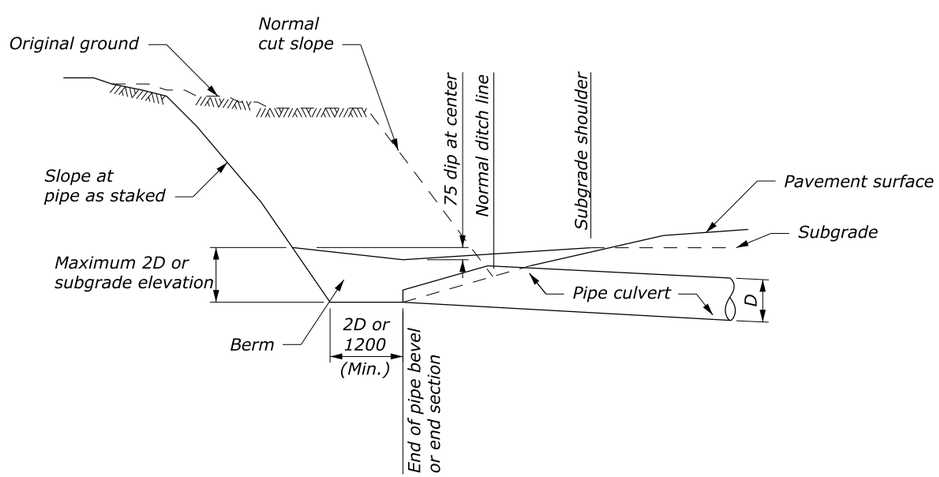

SECTION A-A

TYPE I

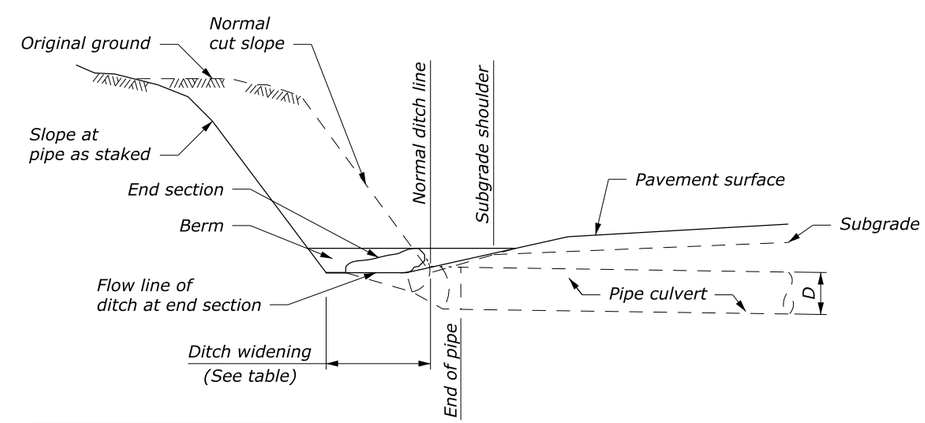

DITCH WIDENING	
PIPE SIZE (D)	WIDENING
450	1500
600	1800
750	2100

SECTION B-B

TYPE II

NO SCALE

U.S. DEPARTMENT OF TRANSPORTATION
FEDERAL HIGHWAY ADMINISTRATION
FEDERAL LANDS HIGHWAY

METRIC STANDARD

PIPE CULVERT INLET TREATMENT IN CUT SLOPES

STANDARD APPROVED FOR USE 3/1996
REVISED: 6/2005

STANDARD
M602-6

3 December 2015 8:29 AM c:\myfiles\pw_production\dms52075\Std602-6.dgn [Metric]

STATE	PROJECT	SHEET NUMBER

CONCRETE ROUND PIPE CULVERT

FILL HEIGHT AND PIPE CLASS TABLE

PIPE SIZE DIAMETER INCHES	MINIMUM COVER INCHES	EMBANKMENT CLASS II	EMBANKMENT CLASS III	EMBANKMENT CLASS IV	EMBANKMENT CLASS V	TRENCH CLASS II	TRENCH CLASS III	TRENCH CLASS IV	TRENCH CLASS V
		MAXIMUM FILL HEIGHT ABOVE TOP OF PIPE IN FEET							
12	12	10	10	15	23	18	18	26	13
18	12	10	10	25	39	13	13	31	45
24	12	10	10	15	30	15	15	22	40
30	12	9	13	15	35	13	16	20	46
36	12	9	9	20	41	10	13	26	56
48	12	12	13	26	44	15	16	30	49
60	12	15	17	28	44	15	20	32	49
72	12	13	17	30	41	15	20	35	49
84	12	13	19	30		15	23	37	
96	12	13	20			15	24		
108	14	15	20			18	26		

LEGEND:

- Bedding material (uncompacted).
- Embankment material placed in layers not exceeding 6" compacted depth.
- Compacted backfill material placed in layers not exceeding 6" compacted depth, or lean concrete backfill in accordance with Section 614
- Impermeable backfill material.

NOTE:

1. When directed, camber pipe culverts upwards from a chord through the inlet and outlet inverts an ordinate amount equal to 1% of the pipe length. Develop camber on a parabolic curve. If the midpoint elevation on the parabolic curve as designed exceeds the elevation of the inlet invert, reduce the amount of camber or increase the pipe culvert gradient.
2. Measure minimum cover from the top of the pipe culvert to the subgrade for flexible pavements, and to the top of the pavement for rigid pavements. Measure maximum fill height from the top of the pipe to the top of the pavement for both flexible and rigid pavements.
3. Pipe compaction limits shown are for pipe installation in an embankment. For pipe installation in a trench, the compaction limits shall be the walls of the trench.
4. Where unyielding or unstable material is encountered, install the pipe culvert according to the limits of pipe compaction shown on Standard 602-3.
5. Maximum fill heights for pipe culvert installations may be increased on approval of site-specific structural pipe designs meeting the criteria of AASHTO Standard Specifications for Highway Bridges.
6. Use Supplemental Concrete Pipe Tie when specified in the contract documents.

BEDDING DEPTH	
PIPE SIZE (H)	DEPTH
12" TO 54"	4"
> 54"	6"

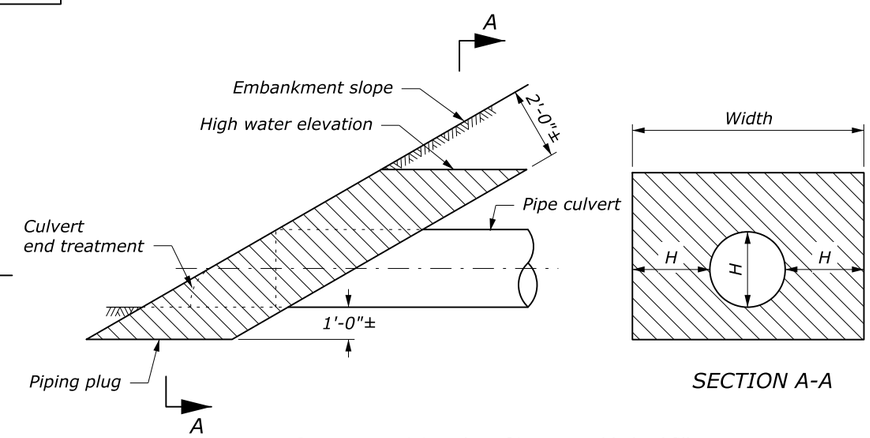

SECTION A-A

Construct a piping plug of impermeable backfill material at the pipe inlet where granular material is used for backfill. Width may be adjusted to tie into impervious material.

PIPING PLUG

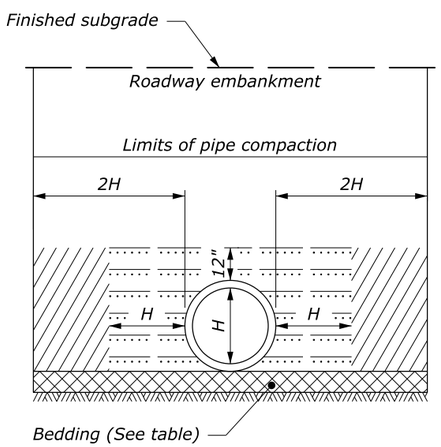

EMBANKMENT INSTALLATION

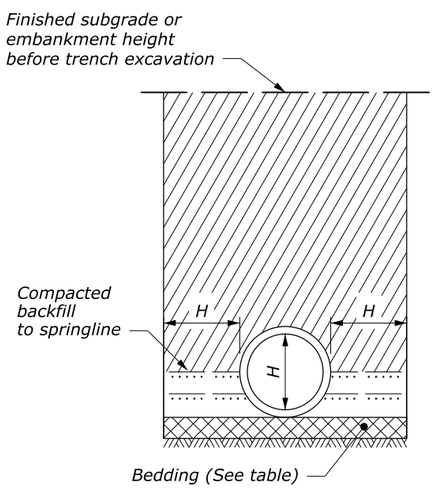

TRENCH INSTALLATION

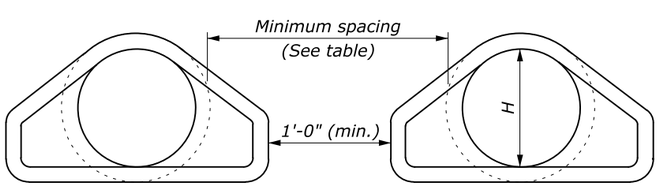

MULTIPLE ROUND PIPE INSTALLATION

MINIMUM SPACING		
DIAMETER	EMBANKMENT	TRENCH
12"-36"	15"	2H
36"-96"	0.5H	72"
OVER 96"	48"	72"

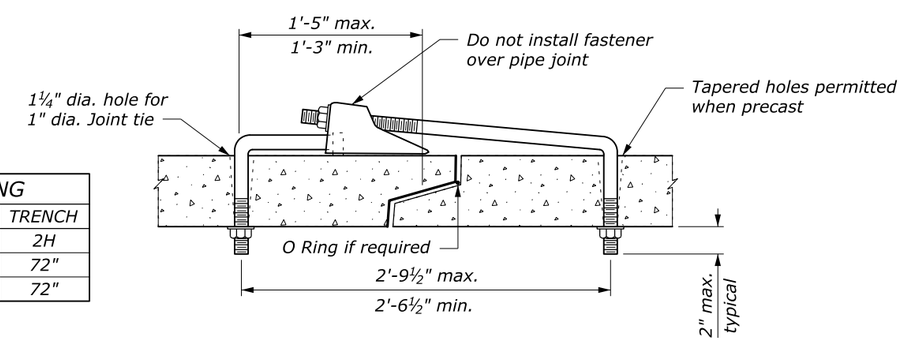

SUPPLEMENTAL CONCRETE PIPE TIE

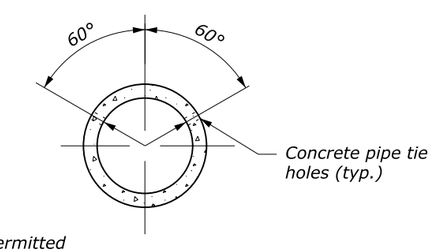

NO SCALE

U.S. DEPARTMENT OF TRANSPORTATION
FEDERAL HIGHWAY ADMINISTRATION
FEDERAL LANDS HIGHWAY

U.S. CUSTOMARY STANDARD

CONCRETE PIPE CULVERT INSTALLATION

STANDARD APPROVED FOR USE 12/1993
REVISED: 4/1994 6/2005
DRAFT: 6/2008

STANDARD 602-7

3 December 2015 12:10 PM c:\myfiles\pw_production\dms52075\Std602-7.dgn [USC]

STATE	PROJECT	SHEET NUMBER

CONCRETE ROUND PIPE CULVERT

FILL HEIGHT AND PIPE CLASS TABLE

PIPE SIZE		EMBANKMENT				TRENCH			
DIAMETER	MINIMUM COVER	CLASS II	CLASS III	CLASS IV	CLASS V	CLASS II	CLASS III	CLASS IV	CLASS V
		MAXIMUM FILL HEIGHT ABOVE TOP OF PIPE IN METERS							
300	300	3.0	3.0	4.5	7.0	5.5	5.5	8.0	4.0
450	300	3.0	3.0	7.5	12.0	4.0	4.0	9.0	13.5
600	300	3.0	3.0	4.5	9.0	4.5	4.5	6.5	12.0
750	300	2.5	4.0	4.5	10.5	4.0	5.0	6.0	14.0
900	300	2.5	2.5	6.0	12.5	3.0	4.0	8.0	17.0
1200	300	3.5	4.0	8.0	13.5	4.5	5.0	9.0	15.0
1500	300	4.5	5.0	8.5	13.5	4.5	6.0	9.5	15.0
1800	300	4.0	5.0	9.0	12.5	4.5	6.0	10.5	15.0
2100	300	4.0	5.5	9.0		4.5	7.0	11.0	
2400	300	4.0	6.0			4.5	7.0		
2700	350	4.5	6.0			5.5	8.0		

LEGEND:

- Bedding material (uncompacted).
- Embankment material placed in layers not exceeding 150 compacted depth.
- Compacted backfill material placed in layers not exceeding 150 compacted depth, or lean concrete backfill in accordance with Section 614
- Impermeable backfill material.

NOTE:

1. When directed, camber pipe culverts upwards from a chord through the inlet and outlet inverts an ordinate amount equal to 1% of the pipe length. Develop camber on a parabolic curve. If the midpoint elevation on the parabolic curve as designed exceeds the elevation of the inlet invert, reduce the amount of camber or increase the pipe culvert gradient.
2. Measure minimum cover from the top of the pipe culvert to the subgrade for flexible pavements, and to the top of the pavement for rigid pavements. Measure maximum fill height from the top of the pipe to the top of the pavement for both flexible and rigid pavements.
3. Pipe compaction limits shown are for pipe installation in an embankment. For pipe installation in a trench, the compaction limits shall be the walls of the trench.
4. Where unyielding or unstable material is encountered, install the pipe culvert according to the limits of pipe compaction shown on Standard M602-3.
5. Maximum fill heights for pipe culvert installations may be increased on approval of site-specific structural pipe designs meeting the criteria of AASHTO Standard Specifications for Highway Bridges.
6. Use Supplemental Concrete Pipe Tie when specified in the contract documents.
7. Dimensions without units are millimeters.

BEDDING DEPTH	
PIPE SIZE (H)	DEPTH
300 TO 1350	100
> 1350	150

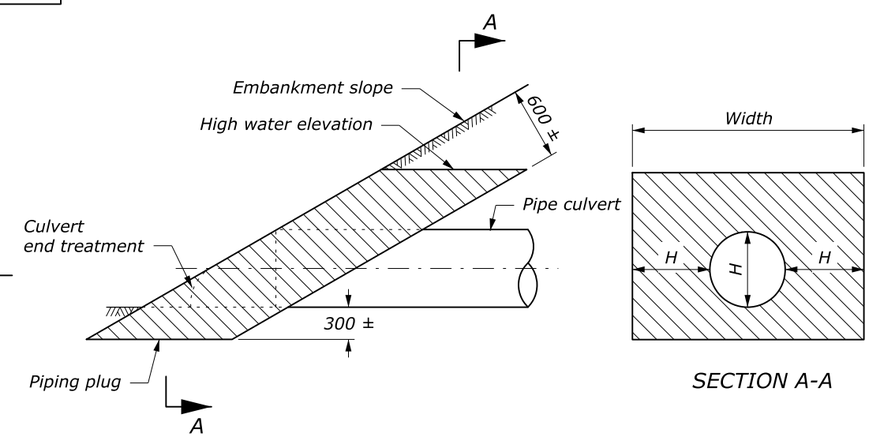

SECTION A-A

Construct a piping plug of impermeable backfill material at the pipe inlet where granular material is used for backfill. Width may be adjusted to tie into impervious material.

PIPING PLUG

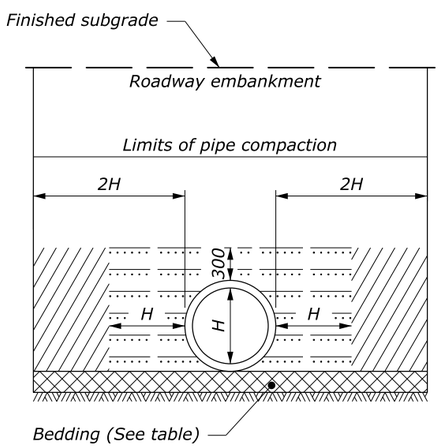

EMBANKMENT INSTALLATION

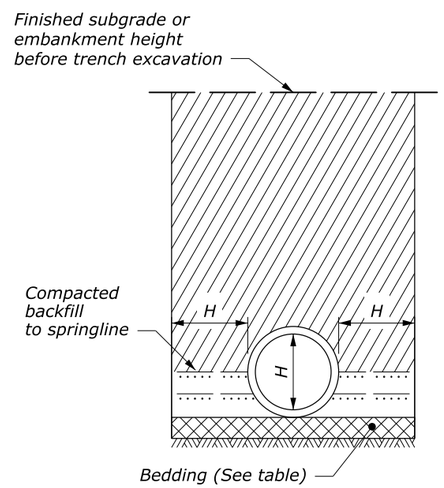

TRENCH INSTALLATION

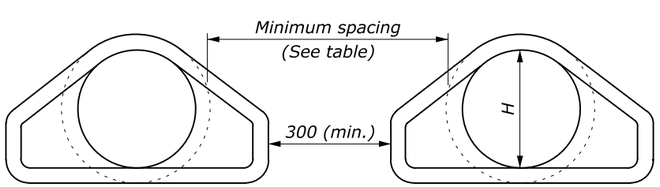

MULTIPLE ROUND PIPE INSTALLATION

MINIMUM SPACING		
DIAMETER	EMBANKMENT	TRENCH
300 - 900	380	2H
900 - 2400	0.5H	1830
OVER 2400	1220	1830

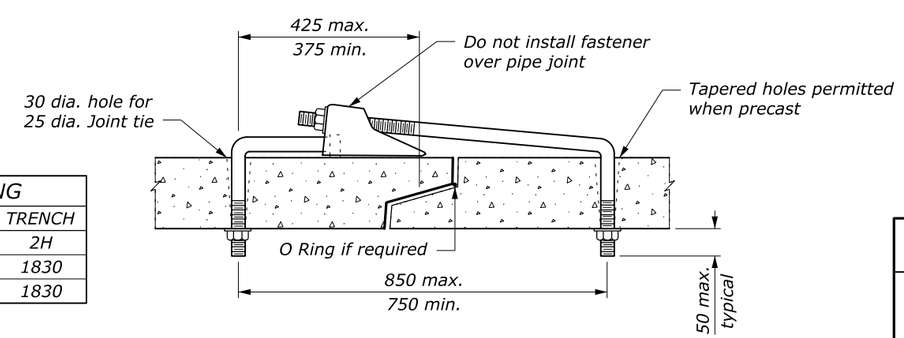

SUPPLEMENTAL CONCRETE PIPE TIE

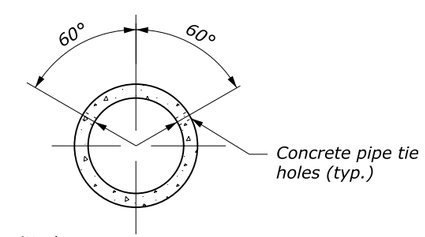

NO SCALE

U.S. DEPARTMENT OF TRANSPORTATION
FEDERAL HIGHWAY ADMINISTRATION
FEDERAL LANDS HIGHWAY

METRIC STANDARD

CONCRETE PIPE CULVERT INSTALLATION

STANDARD APPROVED FOR USE 3/1996
REVISED: 6/2005
DRAFT: 6/2008

STANDARD M602-7

3 December 2015 12:11 PM c:\myfiles\pw_production\dms52075\Std602-7.dgn [Metric]

STATE	PROJECT	SHEET NUMBER

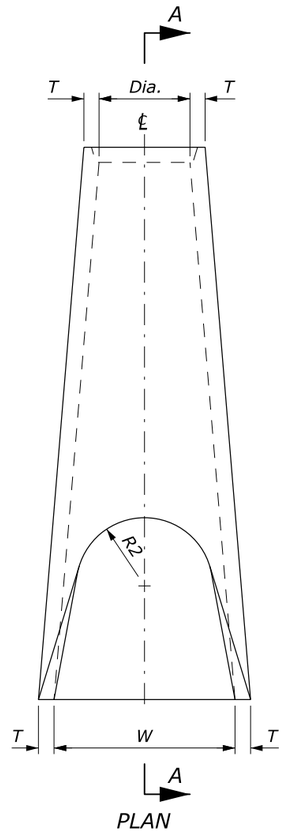

PLAN

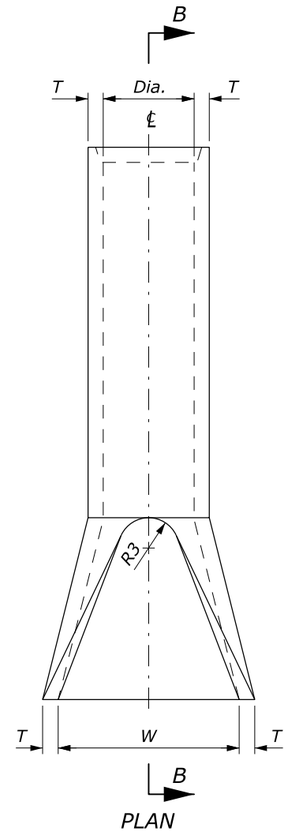

PLAN

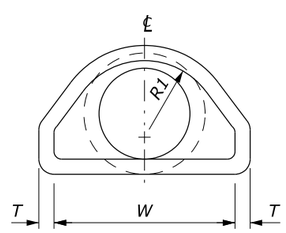

ELEVATION

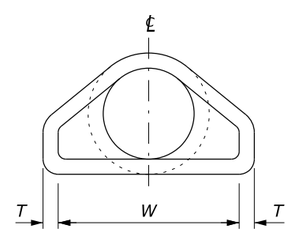

ELEVATION

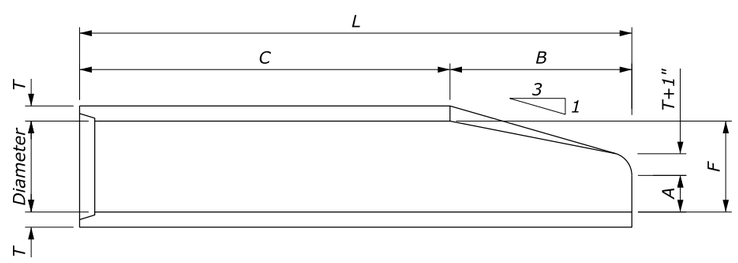

SECTION A-A

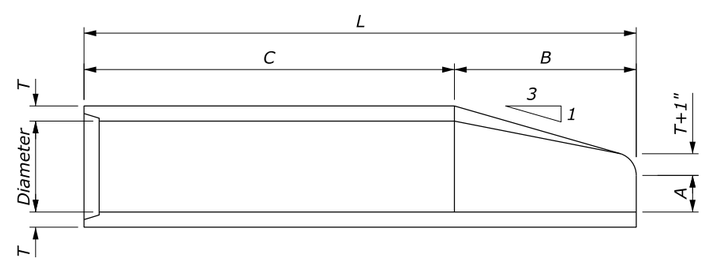

SECTION B-B

NOTE:

1. Variations in design and dimensions are permitted to allow for manufacturer's standards.
2. Fabricate the outlet end section with a groove end and the inlet end section with a tongue end.
3. Warp embankment slopes to match the slope of the flared end section.

END SECTIONS FOR ROUND PIPE CULVERT

PIPE SIZE DIAMETER INCHES	DIMENSIONS INCHES									
	T	A	B	C	L	W	F	R1	R2	R3
12	2	4	24	48⅞	72⅞	24	13	10⅛	9	4
15	2¼	6	27		73	30	16	12½	11	6
18	2½	9	27		73	36	19	15½	12	7½
21	2¾	9	36		73	42	22	16½	13	5
24	3	9½	43½		73½	48	25	16¾	14	8
27	3¼	10½	48	25½	73½	54	28	--	14½	9
30	3½	12	54	19¾	73¾	60	31	18½	15	8
33	3¾	13½"	59½	37½	96	66	34	23¾	17½	9
36	4	15	63		96	72	37	23¼	20	11
42	4½	21	63		96	78	43	--	22	11
48	5	24	72		96	84	49	--	22	12

NO SCALE

U.S. DEPARTMENT OF TRANSPORTATION
FEDERAL HIGHWAY ADMINISTRATION
FEDERAL LANDS HIGHWAY

U.S. CUSTOMARY STANDARD

CONCRETE END SECTION FOR ROUND PIPE

STANDARD APPROVED FOR USE 12/1993
REVISED: 4/1994 6/2005

STANDARD 602-8

7 December 2015 11:51 AM c:\myfiles\pw_production\dms52075\Std602-8.dgn [USC]

STATE	PROJECT	SHEET NUMBER

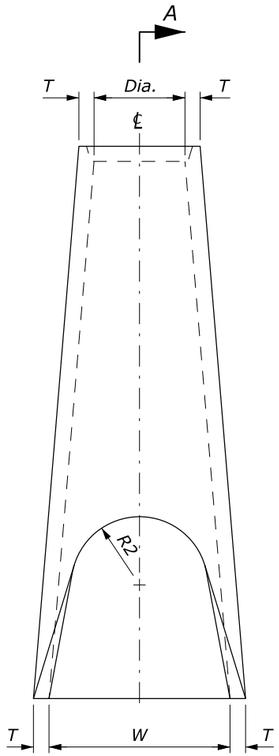

PLAN

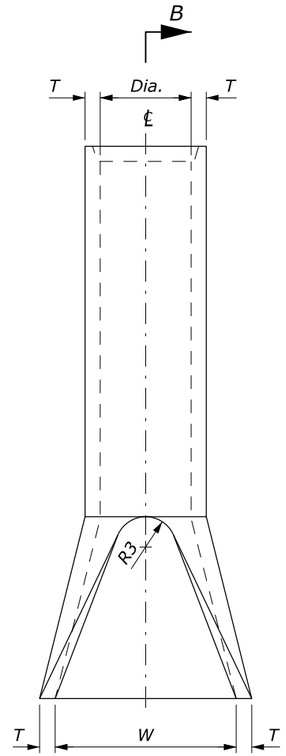

PLAN

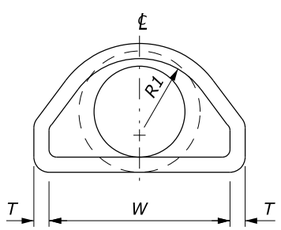

ELEVATION

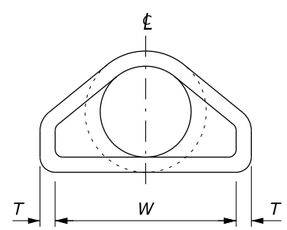

ELEVATION

NOTE:

1. Variations in design and dimensions are permitted to allow for manufacturer's standards.
2. Fabricate the outlet end section with a groove end and the inlet end section with a tongue end.
3. Warp embankment slopes to match the slope of the flared end section.
4. Dimensions without units are millimeters.

END SECTIONS FOR ROUND PIPE CULVERT

PIPE SIZE	DIMENSIONS									
DIAMETER	T	A	B	C	L	W	F	R1	R2	R3
300	50	100	600	1222	1822	600	325	253	225	100
375	57	150	675	1150	1825	750	400	312	275	150
450	63	225	675	1150	1825	900	475	388	300	188
525	69	225	900	925	1825	1050	550	412	325	125
600	75	238	1088	750	1838	1200	625	420	350	200
675	82	263	1200	638	1838	1350	700	--	362	225
750	88	300	1350	494	1844	1500	775	462	375	200
825	94	345	1485	938	2400	1650	865	594	438	225
900	100	375	1585	825	2400	1800	925	580	500	275
1050	113	525	1585	825	2400	1950	1095	--	550	275
1200	125	600	1800	600	2400	2100	1225	--	550	300

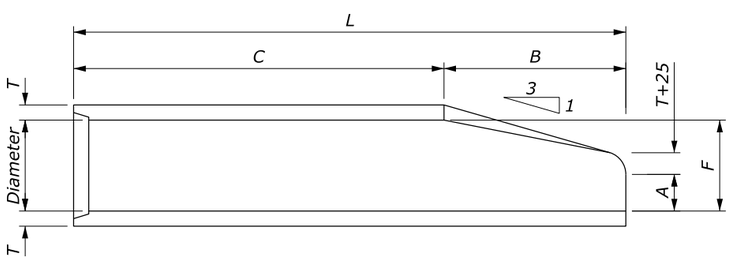

SECTION A-A

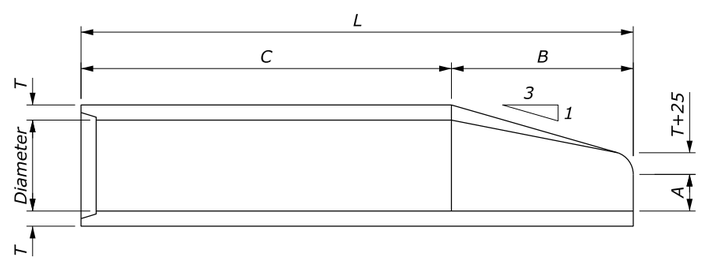

SECTION B-B

NO SCALE

U.S. DEPARTMENT OF TRANSPORTATION
FEDERAL HIGHWAY ADMINISTRATION
FEDERAL LANDS HIGHWAY

METRIC STANDARD

CONCRETE END SECTION FOR ROUND PIPE

STANDARD APPROVED FOR USE 3/1996
REVISED: 6/2005

STANDARD
M602-8

7 December 2015 11:51 AM c:\myfiles\pw_production\dms52075\Std602-8.dgn [Metric]

STATE	PROJECT	SHEET NUMBER

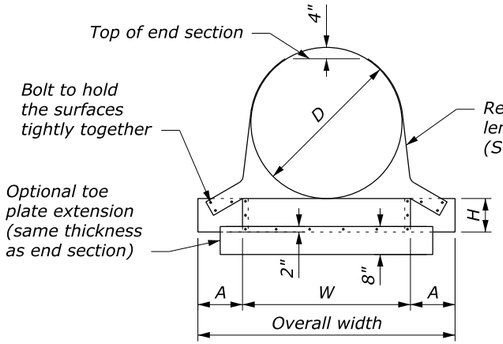

FRONT VIEW
ROUND PIPE CULVERT

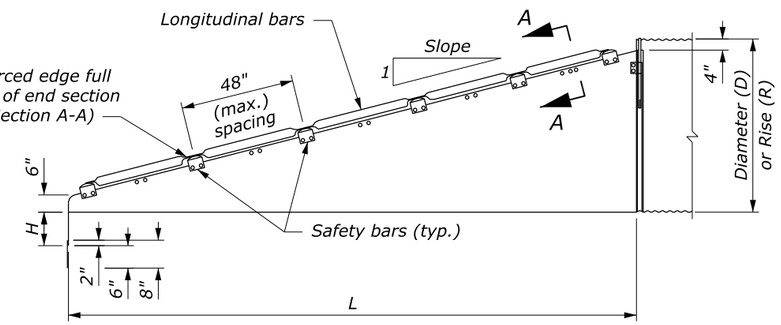

ELEVATION
CROSS DRAINAGE END SECTION

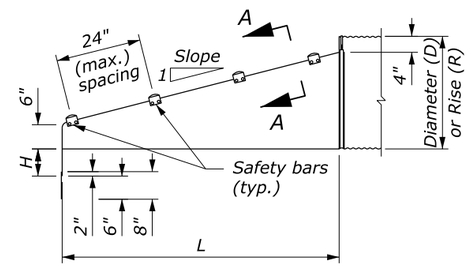

ELEVATION
PARALLEL DRAINAGE END SECTION

NOTE:

1. Use end sections on 1V:4H to 1V:6H slopes only. Use toe plate extension where shown on the plans.
2. Fabricate safety and longitudinal bars from steel pipe conforming to ASTM A53 schedule 40 specifications. Galvanize bars hot dipped after fabrication.
3. A longitudinal bar is required for cross drainage end sections when the span is greater than 30". Use additional longitudinal bars if spacing exceeds 30" on larger end sections.
4. Safety and longitudinal bars are not required on 30" and smaller cross drainage end sections.
5. Safety bars are not required on 18" and smaller parallel drainage end sections.
6. 18" diameter sleeves have a thickness of 0.079", all others are 0.109".

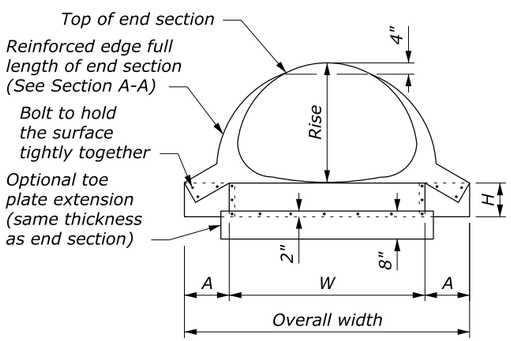

FRONT VIEW
PIPE ARCH CULVERT

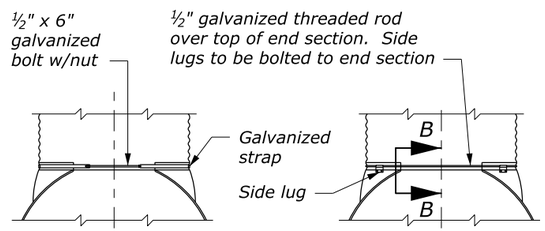

FOR METAL ROUND PIPES 15" THRU 24"
TYPE #1

FOR METAL ROUND PIPES 30" AND LARGER. FOR PIPE ARCHES 21" X 15" AND LARGER
TYPE #2

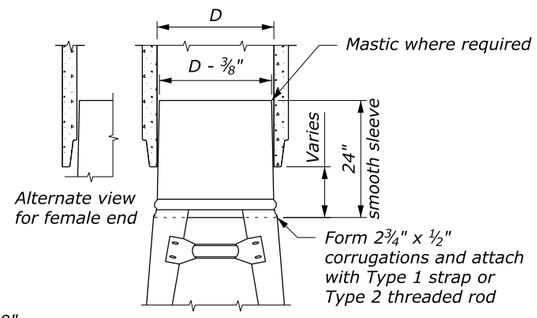

FOR ALL SIZES OF CONCRETE ROUND OR PIPE ARCHES
TYPE #3

CONNECTOR DETAILS

METAL END SECTIONS FOR ROUND PIPE CULVERT							
PIPE SIZE Ø INCHES	METAL THICK (MIN.) INCH/GAGE	DIMENSIONS IN INCHES					
		A	H	W	OVERALL WIDTH	L	
						Slope=4	Slope=6
18	0.064/16	8	6	24	40	32	47
24	0.064/16	8	6	30	46	55	83
30	0.109/12	12	9	36	60	79	118
36	0.109/12	12	9	42	66	102	154
42	0.109/12	16	12	48	80	126	189
48	0.109/12	16	12	54	86	150	224
54	0.109/12	16	12	60	92	173	260
60	0.109/12	16	12	66	98	197	295

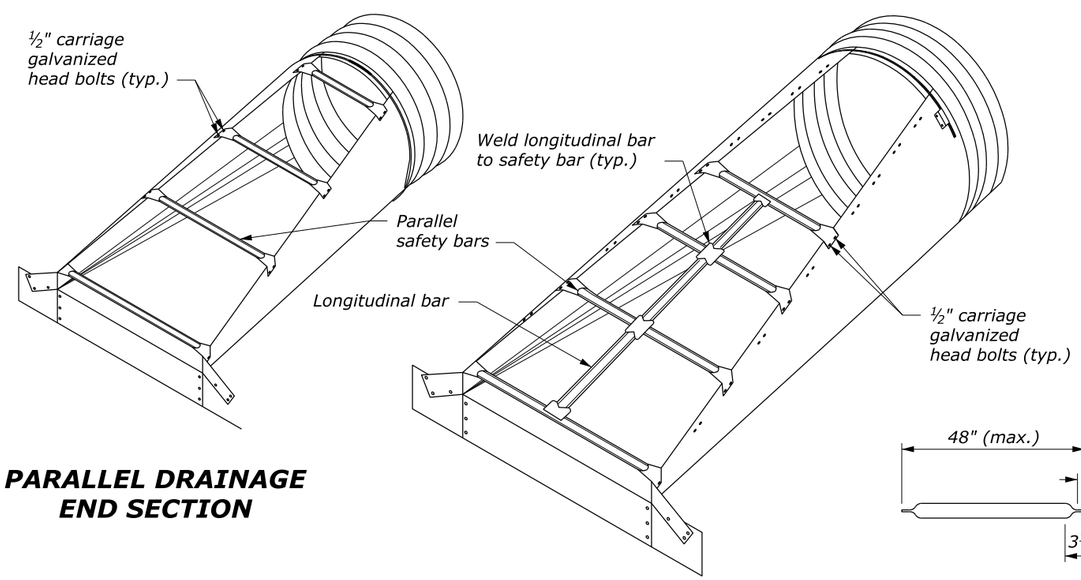

PARALLEL DRAINAGE END SECTION

CROSS DRAINAGE END SECTION

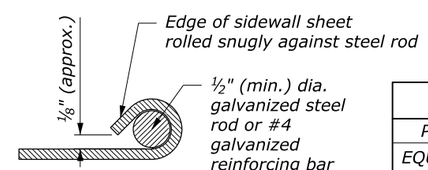

SECTION A-A

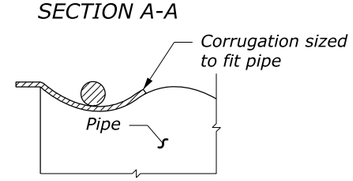

SECTION B-B

METAL END SECTIONS FOR PIPE ARCH CULVERT									
PIPE SIZE (INCHES)			METAL THICK (MIN.) INCH/GAGE	DIMENSIONS (INCHES)					
EQUIV. Ø	SPAN	RISE		A	H	W	OVERALL WIDTH	L	
								Slope=4	Slope=6
18	21	15	0.064/16	8	6	27	43	20	30
24	28	20	0.064/16	8	6	33	49	40	60
30	35	24	0.109/12	12	9	40	64	55	83
36	41	29	0.109/12	12	9	47	71	75	112
42	48	32	0.109/12	16	12	54	86	90	136
48	56	37	0.109/12	16	12	62	94	110	165
54	63	42	0.109/12	16	12	69	101	130	195
60	70	46	0.109/12	16	12	76	107	146	218
72	82	56	0.109/12	16	12	88	120	185	278

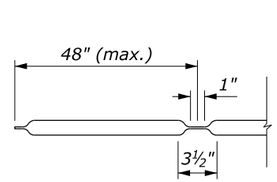

LONGITUDINAL DRAINAGE BAR

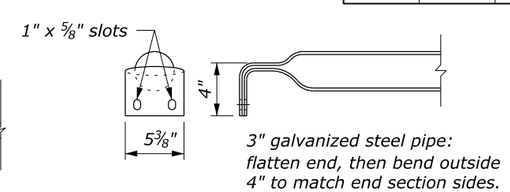

PARALLEL BARS

SAFETY BAR DETAILS

NO SCALE

U.S. DEPARTMENT OF TRANSPORTATION
FEDERAL HIGHWAY ADMINISTRATION
FEDERAL LANDS HIGHWAY

U.S. CUSTOMARY STANDARD

METAL END SECTIONS WITH SAFETY BARS

STANDARD APPROVED FOR USE 6/2005
REVISED:
DRAFT: 1/2016

STANDARD 602-9

8 December 2015 12:52 PM c:\myfiles\pw_production\dms52075\Std602-9.dgn [USC]

STATE	PROJECT	SHEET NUMBER

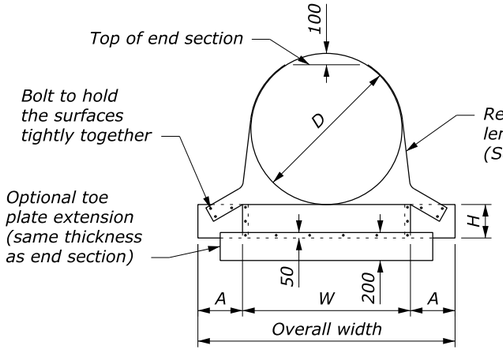

FRONT VIEW
ROUND PIPE CULVERT

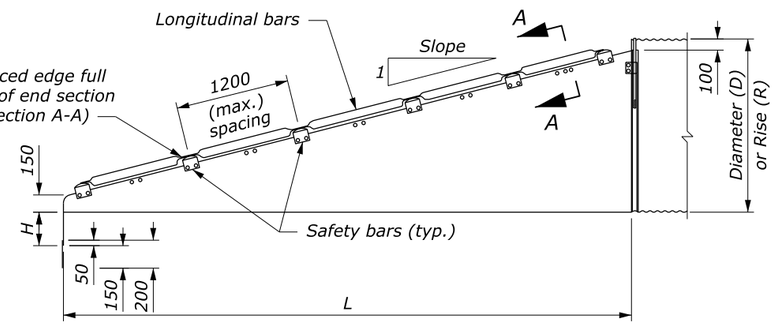

ELEVATION
CROSS DRAINAGE END SECTION

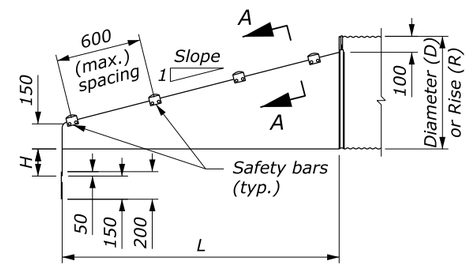

ELEVATION
PARALLEL DRAINAGE END SECTION

NOTE:

1. Use end sections on 1V:4H to 1V:6H slopes only. Use toe plate extension where shown on the plans.
2. Fabricate safety and longitudinal bars from steel pipe conforming to ASTM A53 schedule 40 specifications. Galvanize bars hot dipped after fabrication.
3. A longitudinal bar is required for cross drainage end sections when the span is greater than 750 mm. Use additional longitudinal bars if spacing exceeds 750 mm on larger end sections.
4. Safety and longitudinal bars are not required on 750 mm and smaller cross drainage end sections.
5. Safety bars are not required on 450 mm and smaller parallel drainage end sections.
6. 450 mm diameter sleeves have a thickness of 2.01 mm, all others are 2.77 mm.
7. Dimensions without units are millimeters.

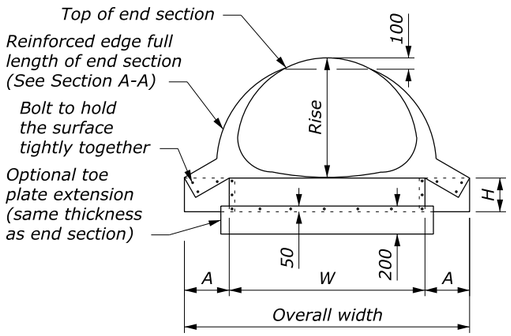

FRONT VIEW
PIPE ARCH CULVERT

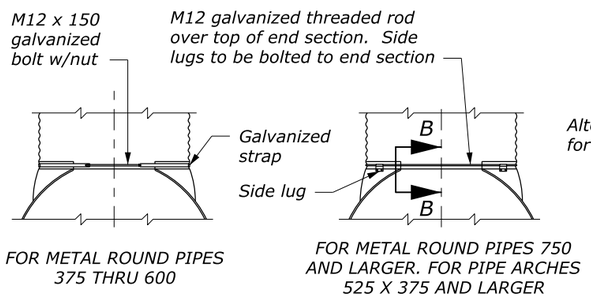

FOR METAL ROUND PIPES 375 THRU 600
TYPE #1

FOR METAL ROUND PIPES 750 AND LARGER. FOR PIPE ARCHES 525 X 375 AND LARGER
TYPE #2

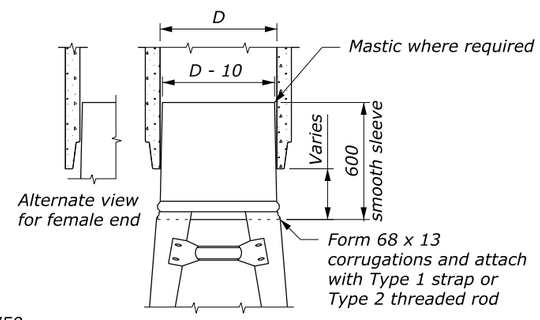

FOR ALL SIZES OF CONCRETE ROUND OR PIPE ARCHES
TYPE #3

CONNECTOR DETAILS

METAL END SECTIONS FOR ROUND PIPE CULVERT							
PIPE SIZE Ø	METAL THICK (MIN.)	DIMENSIONS					
		A	H	W	OVERALL WIDTH	L	
						Slope=4	Slope=6
450	1.63	200	150	600	1000	800	1200
600	1.63	200	150	750	1150	1400	2100
750	2.77	300	225	900	1500	2000	3000
900	2.77	300	225	1050	1650	2600	3900
1050	2.77	400	300	1200	2000	3200	4800
1200	2.77	400	300	1350	2150	3800	5700
1350	2.77	400	300	1500	2300	4400	6600
1500	2.77	400	300	1650	2450	5000	7500

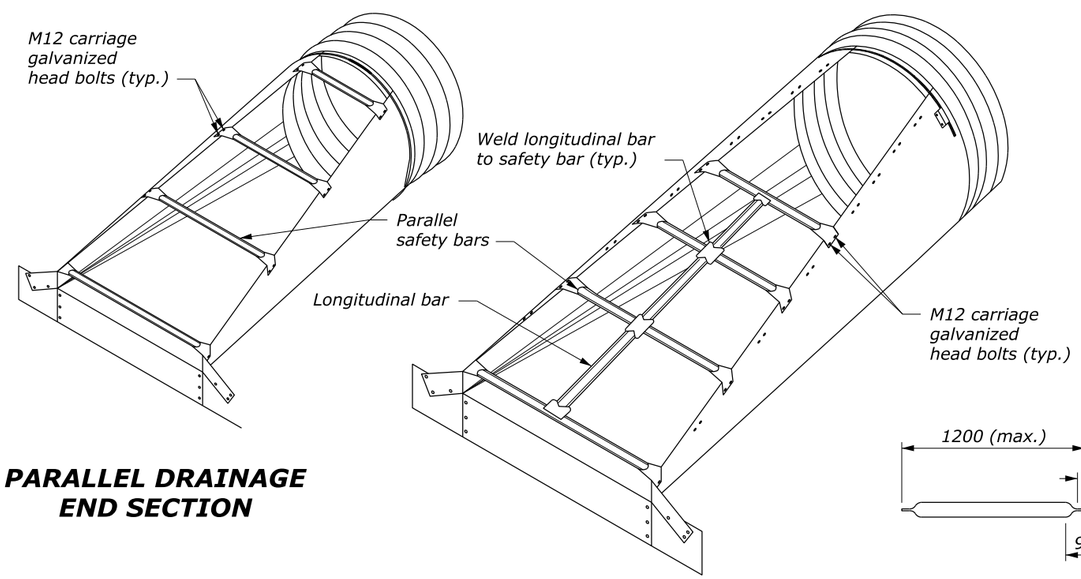

PARALLEL DRAINAGE END SECTION

CROSS DRAINAGE END SECTION

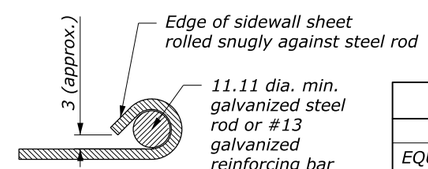

SECTION A-A

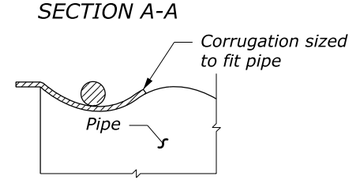

SECTION B-B

METAL END SECTIONS FOR PIPE ARCH CULVERT									
PIPE SIZE			METAL THICK (MIN.)	DIMENSIONS					
EQUIV. Ø	SPAN	RISE		A	H	W	OVERALL WIDTH	L	
								Slope=4	Slope=6
450	525	375	1.63	200	150	675	1075	500	750
600	700	500	1.63	200	150	850	1250	1000	1500
750	875	600	2.77	300	225	1025	1625	1400	2100
900	1050	725	2.77	300	225	1200	1800	1900	2850
1050	1225	825	2.77	400	300	1375	2175	2300	3450
1200	1425	950	2.77	400	300	1575	2375	2800	4200
1350	1600	1075	2.77	400	300	1750	2550	3300	4950
1500	1775	1175	2.77	400	300	1925	2725	3700	5550
1800	2075	1425	2.77	400	300	2225	3025	4700	7050

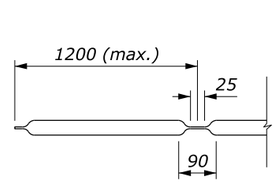

LONGITUDINAL DRAINAGE BAR

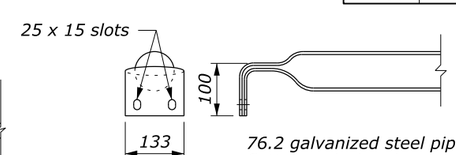

76.2 galvanized steel pipe: flatten end, then bend outside 100 to match end section sides.

PARALLEL BARS

SAFETY BAR DETAILS

NO SCALE

U.S. DEPARTMENT OF TRANSPORTATION
FEDERAL HIGHWAY ADMINISTRATION
FEDERAL LANDS HIGHWAY

METRIC STANDARD

METAL END SECTIONS WITH SAFETY BARS

STANDARD APPROVED FOR USE 3/1996
REVISED: 5/1997 6/2005
DRAFT: 1/2016

STANDARD
M602-9

8 December 2015 1:06 PM c:\myfiles\pw_production\dms52075\Std602-9.dgn [Metric]