STATE	PROJECT	SHEET NUMBER

NOTE:

1. D equals the diameter of all round pipe or the rise dimension of all pipe arch culverts.
2. Dimensions without units are millimeters.

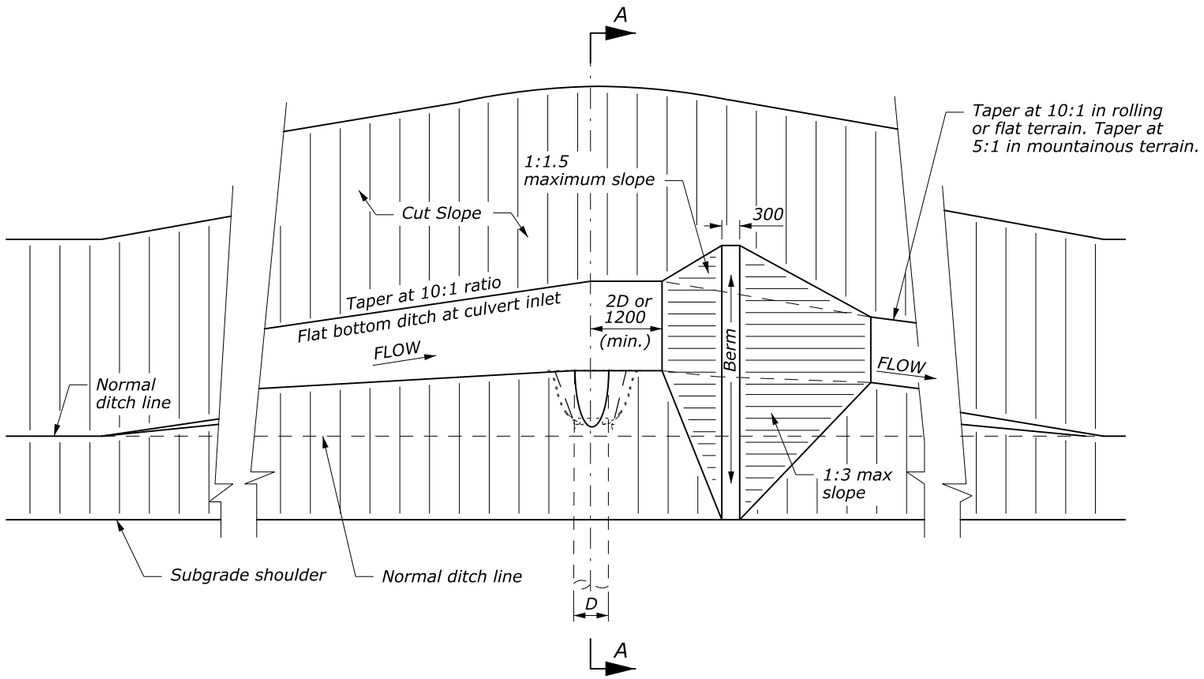

PLAN

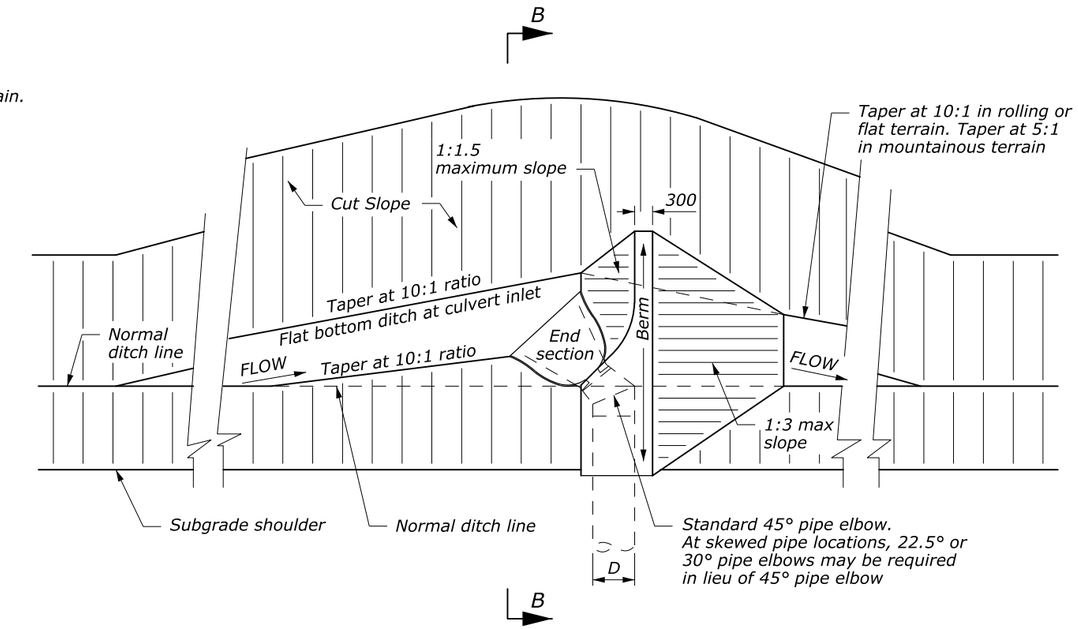

PLAN

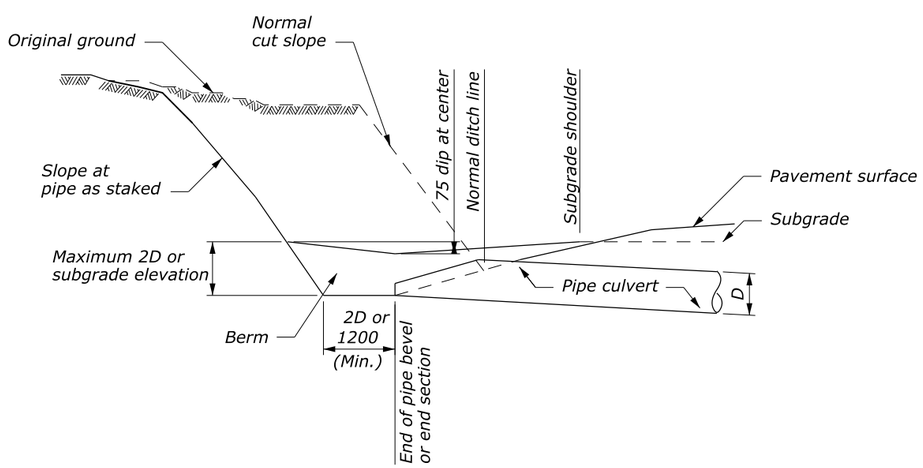

SECTION A-A
TYPE I

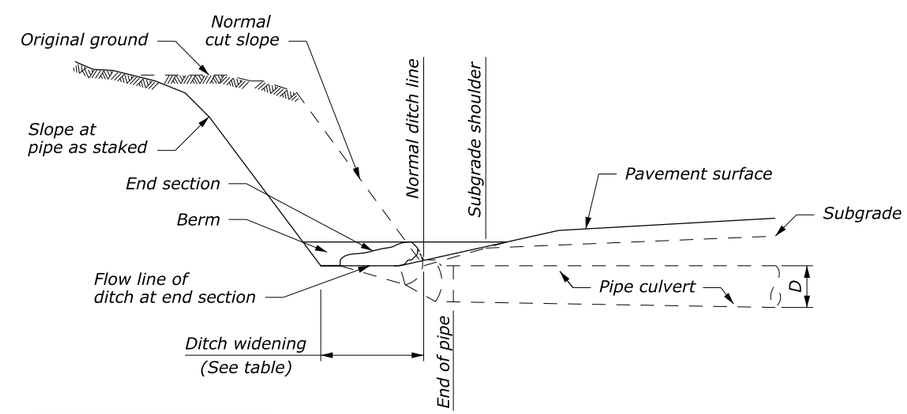

DITCH WIDENING	
PIPE SIZE (D)	WIDENING
450	1500
600	1800
750	2100

SECTION B-B
TYPE II

NO SCALE

U.S. DEPARTMENT OF TRANSPORTATION
FEDERAL HIGHWAY ADMINISTRATION
FEDERAL LANDS HIGHWAY

METRIC STANDARD

PIPE CULVERT INLET TREATMENT IN CUT SLOPES

STANDARD APPROVED FOR USE 3/1996
REVISED: 6/2005

STANDARD
M602-6

8 October 2014 10:08 AM c:\myfiles\pw_production\dms52075\Std.602-6.DRAFT.dgn [Metric]