STATE	PROJECT	SHEET NUMBER

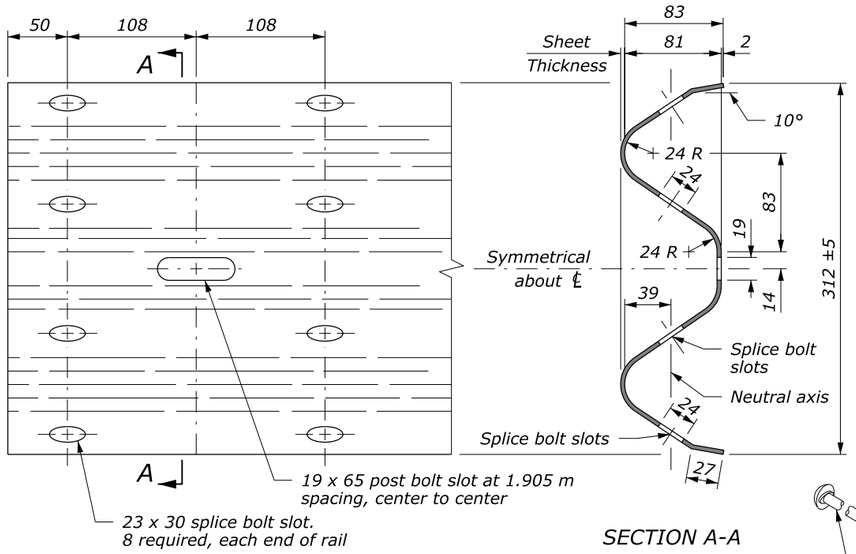

RAIL ELEVATION

SECTION A-A

W BEAM RAIL

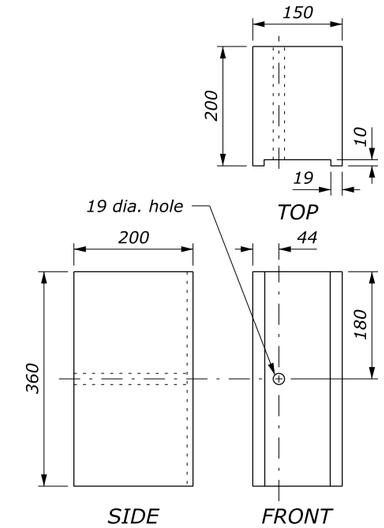

BLOCK

NOTE:

1. When encountering impenetrable material, see Standards M617-13 or M617-24.
2. See Special Contract Requirements when 2 m or longer posts are specified.
3. See Special Contract Requirements when the alternative hole arrangement is specified.
4. Install reflector tab between post bolt and rail, every fourth post. Alternate reflector tab shapes are acceptable.
5. Modified block may be wood, plastic, or composite material. Use consistent material throughout the length of guardrail run.
6. Dimensional tolerances not shown or implied are intended to be those consistent with the proper functioning of the part, including its appearance, and accepted manufacturing practices.
7. Furnish hardware in the metric sizes shown. Equivalent US Customary sizes may be used when metric sizes are unavailable.
8. Dimensions without units are millimeters.

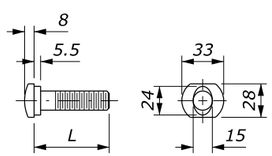

M15 GUARDRAIL BOLT

L	Thread Length
32	30 minimum
50	45 minimum
255	100 minimum
460	100 minimum
640	100 minimum

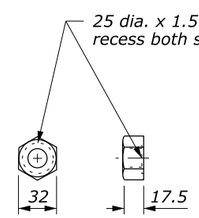

M15 RECESS NUT

GUARDRAIL BOLT AND RECESS NUT

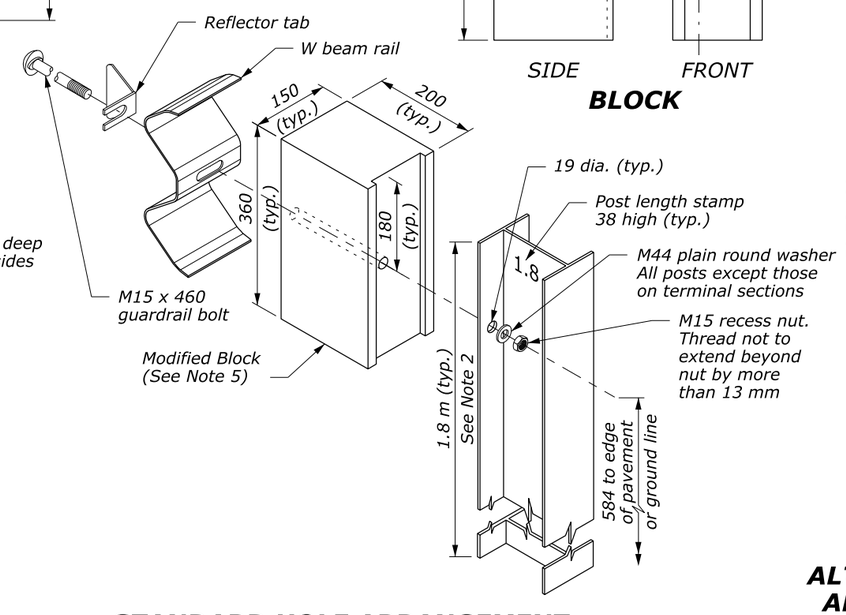

STANDARD HOLE ARRANGEMENT POST AND BLOCK DETAIL

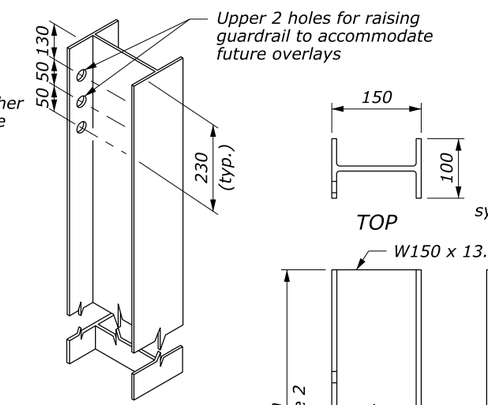

ALTERNATE HOLE ARRANGEMENT POST AND BLOCK DETAIL

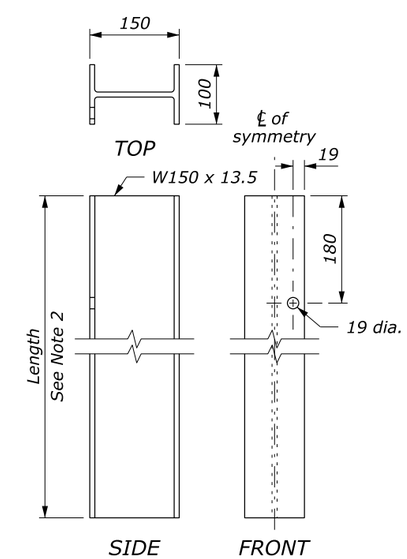

STRUCTURAL SHAPE POST
(STANDARD HOLE ARRANGEMENT)

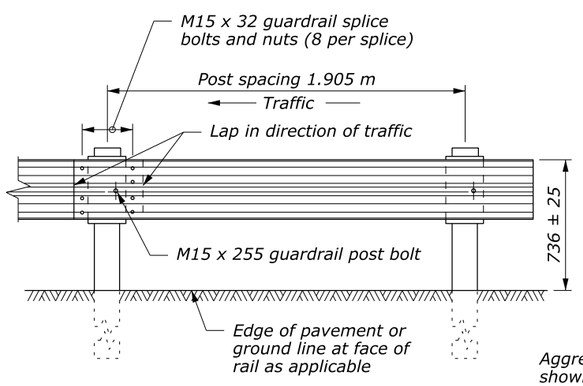

POST SPACING STANDARD POST SECTION

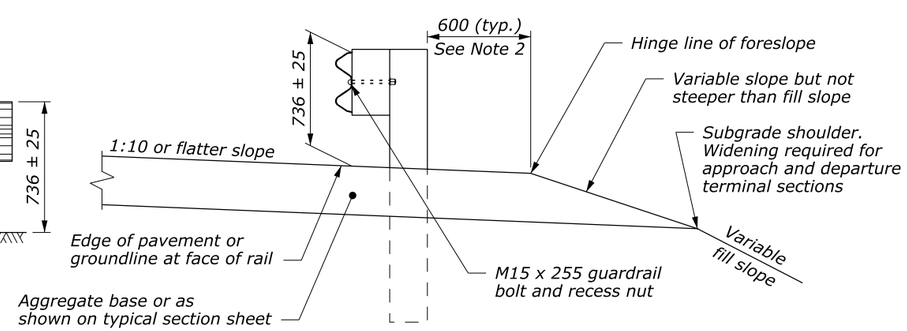

TYPICAL GUARDRAIL CROSS SECTION

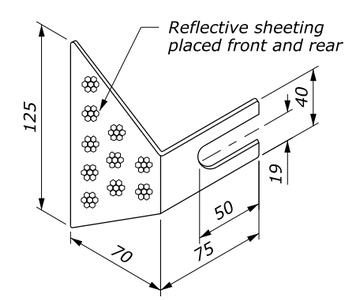

REFLECTOR TAB
(See Note 4)

NO SCALE

U.S. DEPARTMENT OF TRANSPORTATION
FEDERAL HIGHWAY ADMINISTRATION
FEDERAL LANDS HIGHWAY

METRIC STANDARD

G4 W-BEAM GUARDRAIL STEEL POSTS

STANDARD APPROVED FOR USE 3/1996

REVISED: 6/1997 12/1998 6/2005
DRAFT: 10/2013

STANDARD
M617-11

c:\myfiles\pw_production\dms18765\FLH.dgnlib [Standard.M]
24 August 2011 8:14 AM