STATE	PROJECT	SHEET NUMBER

NOTE:

1. Do not use terminal where speeds are in excess of 45 MPH.
2. Extend bolts through the post and block, but not through the W beam rail for Posts #2-8. Extend bolts through the W-Beam rail for Posts #1 and #9.
3. Use Back-up plates on posts #4, 5, 7, and 8.
4. Use Shelf angle on post #2.

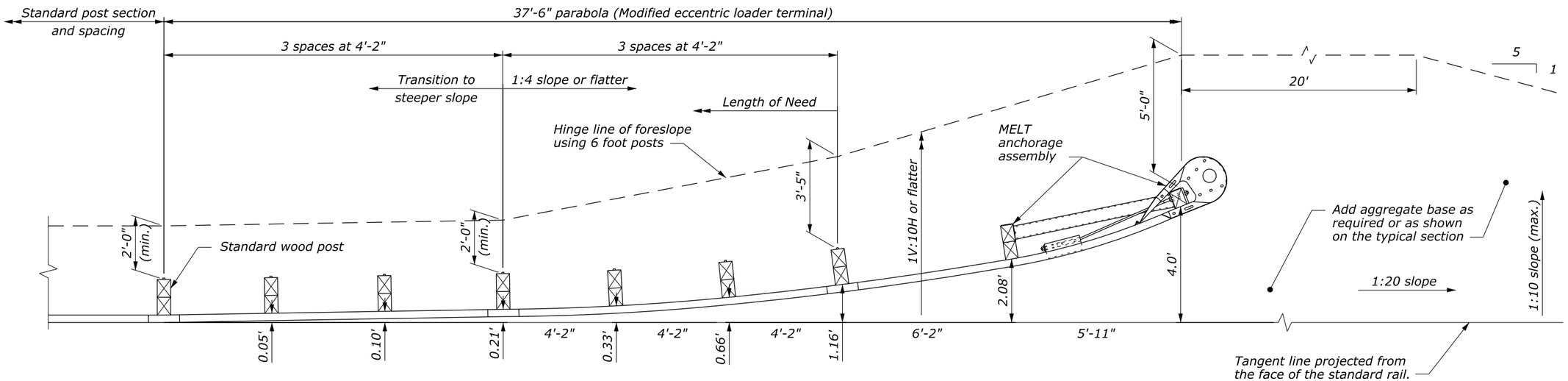

PLAN

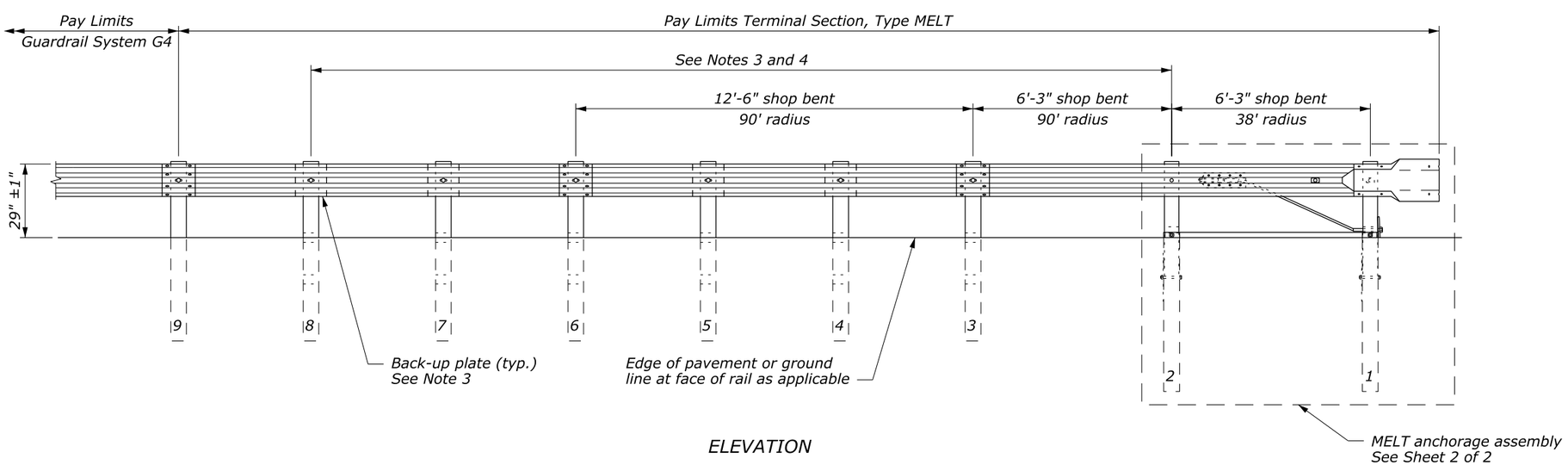

ELEVATION

APPROACH & DEPARTURE FLARE WITH MODIFIED ECCENTRIC LOADER TERMINAL

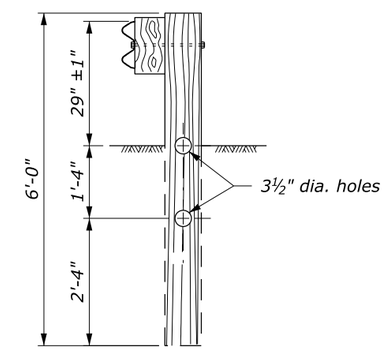

BREAKAWAY LINE POST AND BLOCK
POSTS #3 - #8

NO SCALE

U.S. DEPARTMENT OF TRANSPORTATION
FEDERAL HIGHWAY ADMINISTRATION
FEDERAL LANDS HIGHWAY

U.S. CUSTOMARY STANDARD

G4 W-BEAM GUARDRAIL MODIFIED ECCENTRIC LOADER TERMINAL, TYPE MELT

Sheet 1 of 2

STANDARD APPROVED FOR USE 1/1994
REVISED: 4/1994 6/2005
DRAFT: 5/2014

STANDARD 617-12

4 September 2014 11:01 AM c:\myfiles\pw_production\d0107577\FLH.dgnlib [Standard.US-New]

STATE	PROJECT	SHEET NUMBER

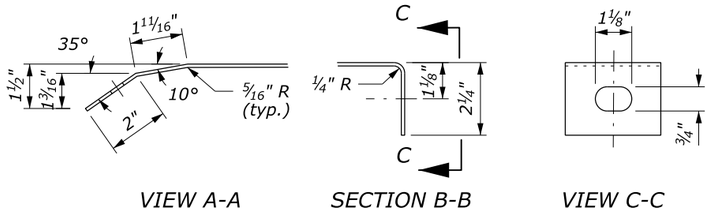

DIAPHRAGM PLATE DETAILS

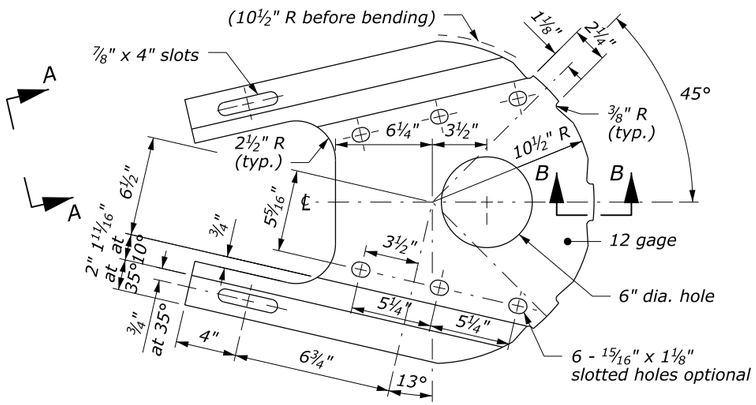

DIAPHRAGM PLATE
(2 required each terminal)

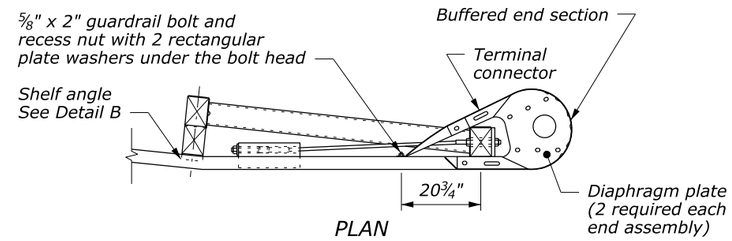

PLAN

NOTE:

1. See Standard 617-15 for other details.
2. Extend bolts through the post and block, but not through the W-Beam rail for Posts #2-8. Extend bolts through the W-Beam rail for Posts #1 and #9.
3. Dimensional tolerances not shown or implied are intended to be those consistent with the proper functioning of the part, including its appearance, and accepted manufacturing practices.

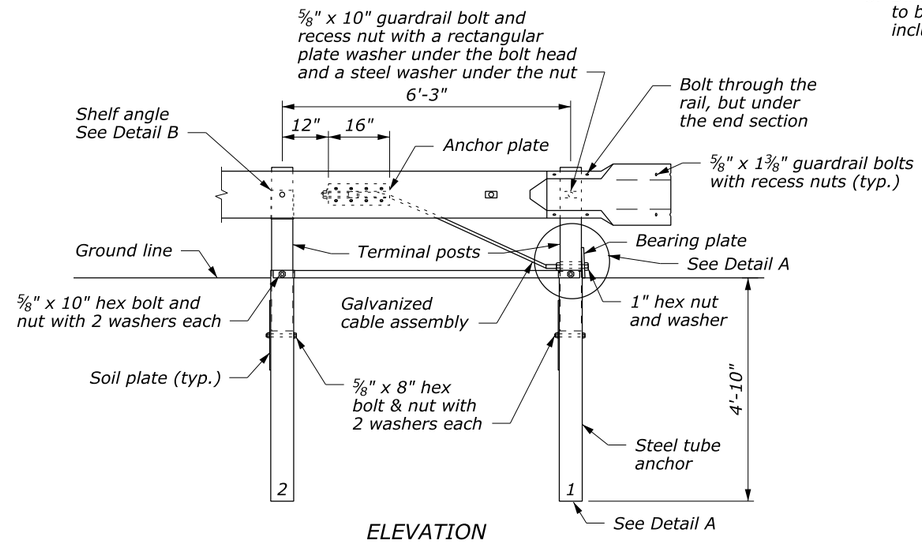

ELEVATION

ANCHORAGE ASSEMBLY

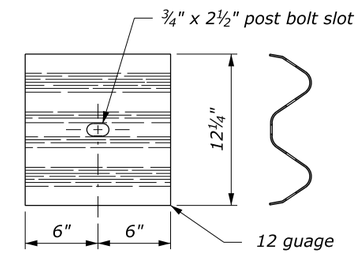

W-BEAM BACK UP PLATE
POSTS #4, 5, 7, & 8

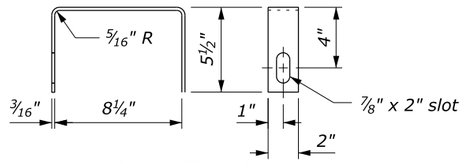

YOKE DETAILS

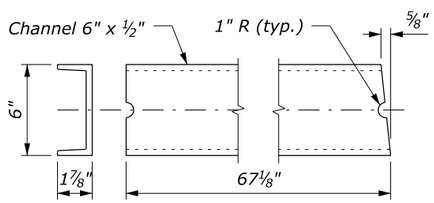

STRUT DETAILS

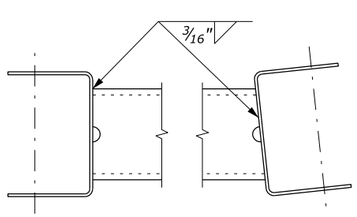

Shown with legs down. For opposite hand, install legs up.

STRUT AND YOKE ASSEMBLY

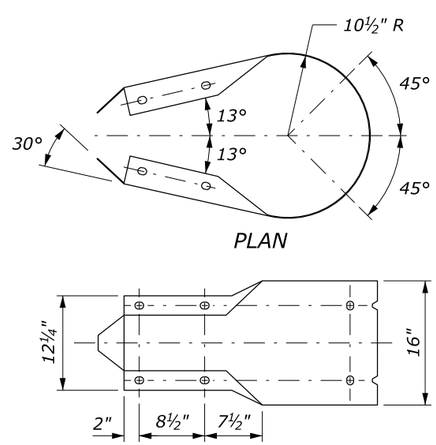

PLAN

ELEVATION

BUFFERED END SECTION

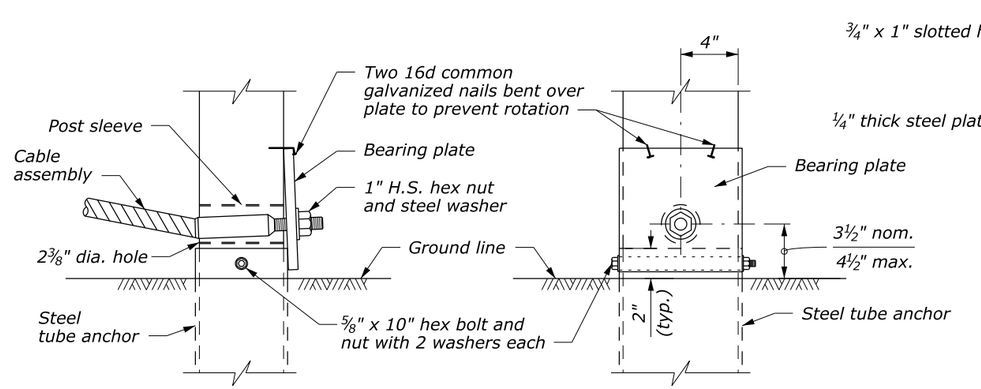

FRONT

RIGHT SIDE

DETAIL A
POST #1 ASSEMBLY

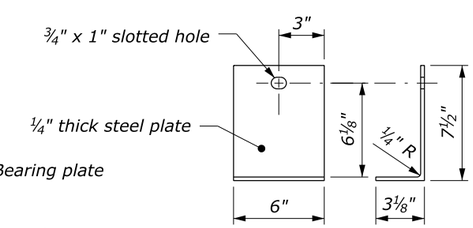

DETAIL B
POST #2 SHELF ANGLE

NO SCALE

U.S. DEPARTMENT OF TRANSPORTATION
FEDERAL HIGHWAY ADMINISTRATION
FEDERAL LANDS HIGHWAY

U.S. CUSTOMARY STANDARD

G4 W-BEAM GUARDRAIL MODIFIED ECCENTRIC LOADER TERMINAL, TYPE MELT

Sheet 2 of 2

STANDARD APPROVED FOR USE 1/1994
REVISED: 4/1994 6/2005
DRAFT: 5/2014

STANDARD 617-12

4 September 2014 11:01 AM c:\myfiles\pw_production\d0107577\FLH.dgnlib [Standard.US-New]