STATE	PROJECT	SHEET NUMBER

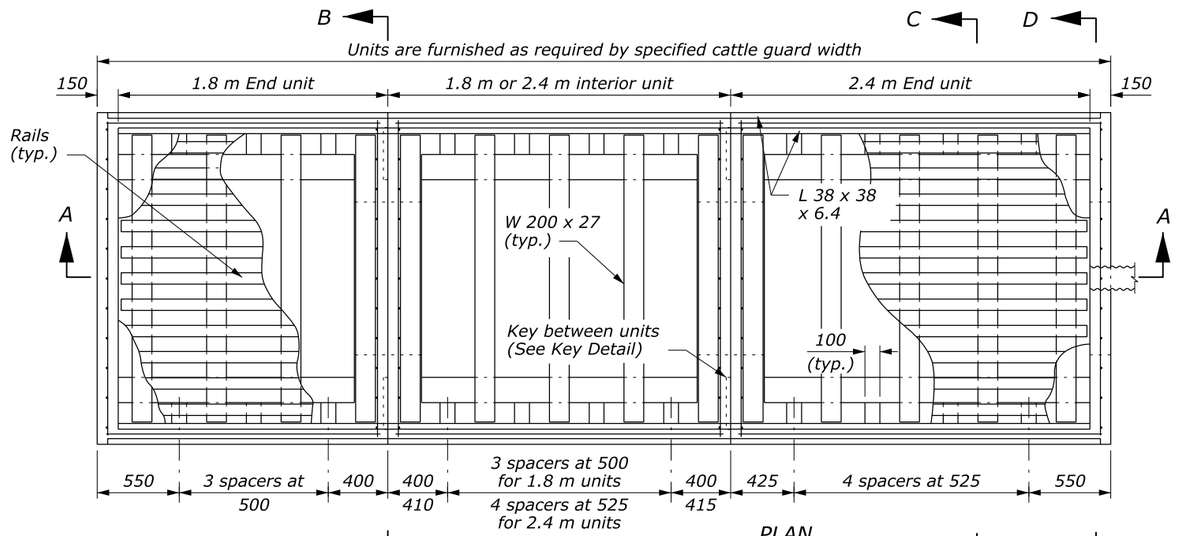

PLAN

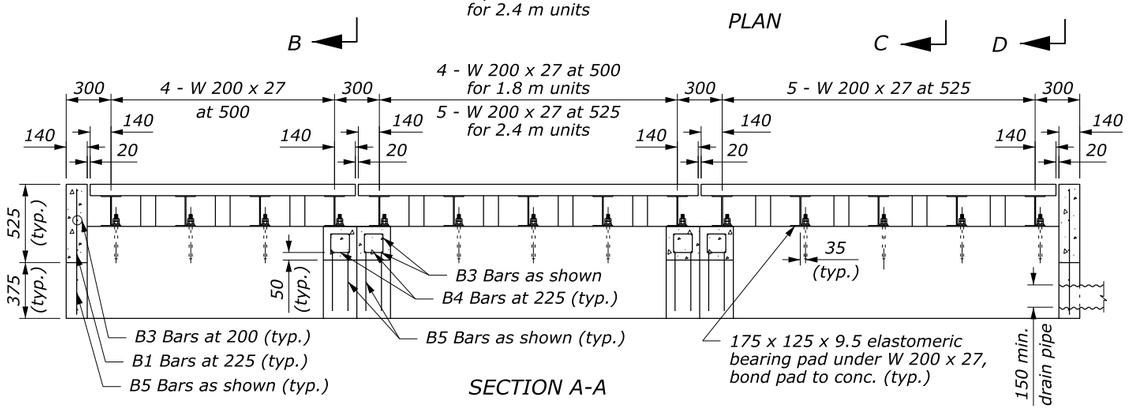

SECTION A-A

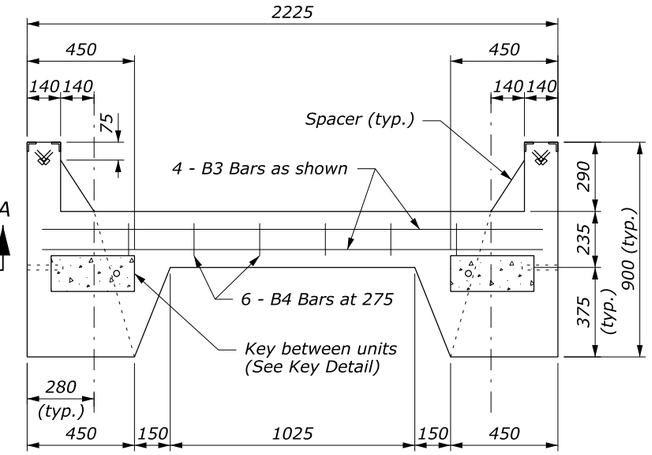

SECTION B-B

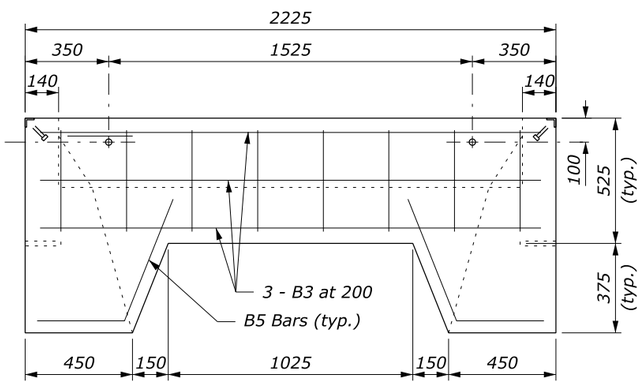

SECTION D-D

NOTE:

1. See Standard M619-1 for reinforcing steel size and grade.
2. See Standard M619-1 and 2 for cattle guard wing details. Fabricate end units to accommodate selected cattle guard wing.
3. Minimum soil bearing 19,500 kg/m2. Place units in fine aggregate bed 75 mm thick over hand leveled soil compacted to not less than 95% density.
4. Chamfer exposed concrete edges 20 mm unless otherwise shown. Give all concrete surfaces a Class 1 finish.
5. Approved alternate designs may be used.
6. Dimensions without units are millimeters.

PRECAST CATTLE GUARD

REINFORCING STEEL AND CONCRETE

UNIT	No. of BARS	BAR MARK	LENGTH	MASS kg	CONCRETE m³
1.8 m END	7	B3	2100	14.6	1.40
	10	B2	1850	18.4	
	8	B1	425	3.4	
	6	B4	650	3.9	
	18	B6	1750	31.3	
	6	B5	900	5.4	
1.8 m INTERIOR	8	B3	2100	16.7	1.41
	10	B2	1650	16.4	
	12	B4	650	7.8	
	18	B6	1750	31.3	
	8	B5	900	7.2	
2.4 m INTERIOR	8	B3	2100	16.7	1.73
	10	B2	2250	22.4	
	12	B4	650	7.8	
	20	B6	1750	34.8	
	8	B5	900	7.2	
2.4 m END	7	B3	2100	14.6	1.72
	10	B2	2450	24.4	
	8	B1	425	3.4	
	6	B4	650	3.9	
	20	B6	1750	34.8	
	6	B5	900	5.4	

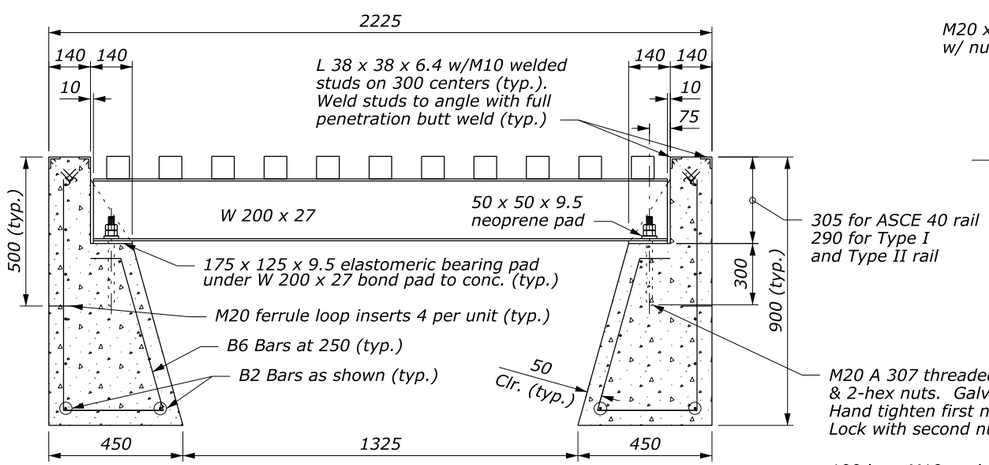

SECTION C-C

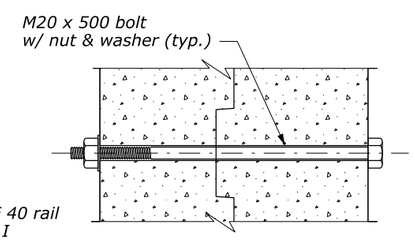

SECTION E-E

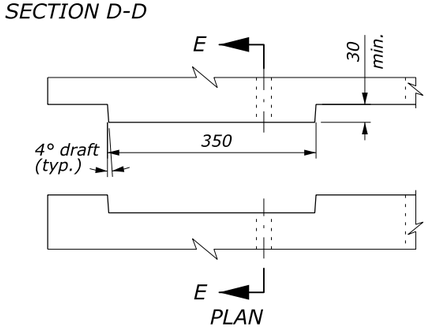

PLAN

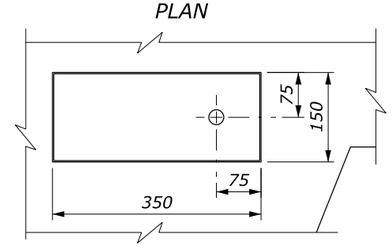

ELEVATION

KEY DETAIL

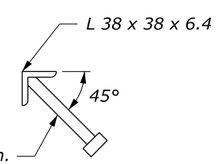

100 long M10 anchor stud. Space anchors at 300 centers. Weld to angle with full penetration butt weld. Galvanize each assembly after fabrication.

GUARD ANGLE DETAIL

NO SCALE

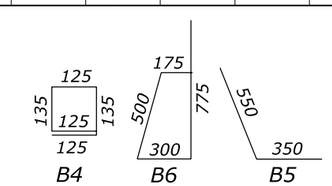

BAR BENDING DETAIL

U.S. DEPARTMENT OF TRANSPORTATION
FEDERAL HIGHWAY ADMINISTRATION
FEDERAL LANDS HIGHWAY

METRIC STANDARD

CATTLE GUARD PRECAST FOUNDATION

STANDARD APPROVED FOR USE 3/1996

REVISED: 11/1997 6/2005
DRAFT: 6/2008

STANDARD M619-3

15 October 2014 3:43 PM c:\myfiles\pw_production\dms67488\Std.619-3.DRAFT.dgn [Metric]