PROJECT	SHEET NUMBER

HEADWALL FOR DOUBLE PIPE CULVERT

DIMENSIONS, REINFORCING STEEL AND CONCRETE TABLE OF QUANTITIES

D INCH	H FEET	SQUARE HEADWALL					15° SKEW					30° SKEW					45° SKEW				
		A FEET	B FEET	L FEET	CONC. CUYD	STEEL LB	A FEET	B FEET	L FEET	CONC. CUYD	STEEL LB	A FEET	B FEET	L FEET	CONC. CUYD	STEEL LB	A FEET	B FEET	L FEET	CONC. CUYD	STEEL LB
48	5.00	4.00	6.00	14.00	2.13	180	4.25	6.25	14.75	2.25	191	4.50	7.00	16.00	2.43	203	5.75	8.50	20.00	3.05	257
54	5.25	4.75	6.75	16.25	2.57	210	4.75	7.00	16.50	2.60	217	5.25	7.75	18.25	2.87	239	6.50	9.50	22.50	3.54	295
60	5.50	5.25	7.50	18.00	2.94	236	5.50	7.75	18.75	3.07	248	6.00	8.75	20.75	3.39	279	7.50	10.50	25.50	4.17	336
66	5.75	6.00	8.25	20.25	3.43	289	6.00	8.50	20.50	3.45	290	6.75	9.50	23.00	3.88	327	8.25	11.75	28.25	4.77	407
72	6.00	6.50	9.00	22.00	3.84	318	6.75	9.25	22.75	3.97	331	7.50	10.50	25.50	4.46	368	9.25	12.75	31.25	5.46	457
78	6.25	7.25	9.75	24.25	4.38	361	7.50	10.00	25.00	4.51	374	8.25	11.25	27.75	5.00	410	10.00	13.75	33.75	6.07	498
84	6.50	7.75	10.50	26.00	4.83	410	8.00	10.75	26.75	4.96	424	9.00	12.00	30.00	5.58	476	11.00	14.75	36.75	6.83	586
90	6.75	8.50	11.25	28.25	5.43	458	8.75	11.75	29.25	5.62	475	9.75	13.00	32.50	6.24	526	11.75	16.00	39.50	7.56	638
96	7.00	9.00	12.00	30.00	5.92	491	9.25	12.50	31.00	6.11	509	10.50	13.75	34.75	6.86	575	12.75	17.00	42.50	8.39	699
102	7.25	9.75	12.50	32.00	6.49	553	10.00	13.00	33.00	6.69	571	11.00	14.50	36.50	7.37	637	13.50	17.75	44.75	9.04	783
108	7.50	10.25	13.00	33.50	6.95	591	10.50	13.50	34.50	7.14	604	11.75	15.00	38.50	7.97	676	14.50	18.50	47.50	9.86	842
114	7.75	11.00	13.50	35.50	7.56	632	11.25	14.00	36.50	7.76	654	12.50	15.50	40.50	8.59	717	15.50	19.00	50.00	10.64	893
120	8.00	11.50	14.00	37.00	8.05	666	12.00	14.50	38.50	8.40	695	13.25	16.25	42.75	9.31	771	16.25	19.75	52.25	11.37	949
126	8.25	12.25	14.50	39.00	8.71	748	12.50	15.00	40.00	8.90	760	14.00	16.75	44.75	9.97	858	17.25	20.50	55.00	12.27	1053
132	8.50	12.75	15.00	40.50	9.23	775	13.25	15.50	42.00	9.58	805	14.75	17.25	46.75	10.65	902	18.00	21.25	57.25	13.05	1105
138	8.75	13.50	15.50	42.50	9.93	831	13.75	16.00	43.50	10.11	842	15.50	18.00	49.00	11.44	955	19.00	22.00	60.00	14.00	1173
144	9.00	14.00	16.00	44.00	10.48	902	14.50	16.50	45.50	10.83	922	16.25	18.50	51.00	12.16	1039	19.75	22.75	62.25	14.83	1281
150	9.25	14.75	16.50	46.00	11.21	950	15.25	17.00	47.50	11.57	981	17.00	19.00	53.00	12.91	1087	20.75	23.25	64.75	15.76	1341
156	9.50	15.25	17.00	47.50	11.80	991	15.75	17.50	49.00	12.15	1022	17.50	19.75	54.75	13.59	1144	21.50	24.00	67.00	16.62	1394
162	9.75	16.00	17.50	49.50	12.57	1077	16.50	18.00	51.00	12.93	1109	18.25	20.25	56.75	14.37	1236	22.50	24.75	69.75	17.69	1533
168	10.00	16.50	18.00	51.00	13.19	1121	17.00	18.75	52.75	13.63	1157	19.00	20.75	58.75	15.18	1288	23.25	25.50	72.00	18.60	1581
174	10.25	17.25	18.50	53.00	14.00	1173	17.75	19.25	54.75	14.45	1222	19.75	21.25	60.75	16.00	1353	24.25	26.25	74.75	19.73	1673
180	10.50	17.75	19.00	54.50	14.65	1218	18.50	19.75	56.75	15.29	1276	20.50	22.00	63.00	16.94	1411	25.00	26.75	76.75	20.59	1727

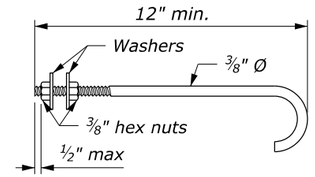

HOOK BOLT DETAIL

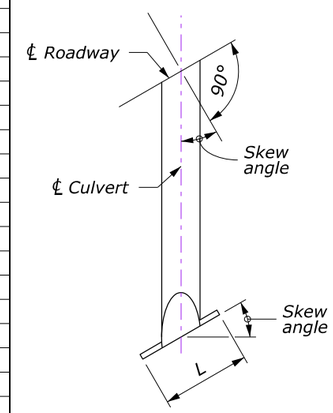

TYPICAL HALF PLAN

NOTE:

1. Concrete conforms to Section 601. Pour concrete monolithically. Chamfer all exposed edges 3/4" and finish all exposed surfaces with a Class 1 ordinary finish.
2. Clearance for reinforcing steel is 2" unless otherwise noted.
3. Headwall dimension "H" may be reduced in solid rock provided the wall is keyed into the rock at least 1 foot. Excavate and backfill according to Section 209.
4. Set hook bolts on nominal 18" centers around pipe pipe perimeter at center of headwall. Hook bolts conform to ASTM A307. Galvanize according to ASTM A153.
5. For installations with more than two pipe culverts, increase the dimension "L" and all quantities shown for double pipe installation by adding a length equal to dimension "B" and the incremental change in quantities for each additional pipe culvert.
6. For skews other than those shown, multiply quantities and dimensions "A", "B" & "L" for square headwalls by secant of the skew angle.
7. Final quantities will be determined by using the tables on this standard.
8. Do not order materials until the length, skew angle, and slope bevel in the field have been approved.

HEADWALL FOR SINGLE PIPE CULVERT

DIMENSIONS, REINFORCING STEEL AND CONCRETE TABLE OF QUANTITIES

D INCH	H FEET	SQUARE HEADWALL			15° SKEW			30° SKEW			45° SKEW		
		L FEET	CONC. CUYD	STEEL LB	L FEET	CONC. CUYD	STEEL LB	L FEET	CONC. CUYD	STEEL LB	L FEET	CONC. CUYD	STEEL LB
48	5.00	8.00	1.25	101	8.25	1.29	109	9.25	1.44	120	11.25	1.75	144
54	5.25	9.25	1.50	124	9.50	1.54	126	10.75	1.75	148	13.00	2.11	175
60	5.50	10.50	1.78	143	10.75	1.81	151	12.00	2.02	164	14.75	2.49	208
66	5.75	11.75	2.06	175	12.25	2.15	186	13.50	2.37	203	16.50	2.89	249
72	6.00	13.00	2.37	196	13.50	2.46	207	15.00	2.73	231	18.50	3.37	286
78	6.25	14.25	2.68	221	14.75	2.78	233	16.50	3.11	259	20.25	3.82	317
84	6.50	15.50	3.02	256	16.00	3.11	268	18.00	3.51	299	22.00	4.29	368
90	6.75	16.75	3.37	284	17.25	3.47	297	19.25	3.87	327	23.75	4.78	406
96	7.00	18.00	3.74	309	18.75	3.90	325	20.75	4.30	364	25.50	5.29	442
102	7.25	19.25	4.12	354	20.00	4.28	371	22.25	4.76	416	27.25	5.83	510
108	7.50	20.50	4.52	381	21.25	4.68	399	23.75	5.24	447	29.00	6.39	554
114	7.75	21.75	4.93	419	22.50	5.10	430	25.00	5.66	479	30.75	6.97	594
120	8.00	23.00	5.36	441	23.75	5.53	460	26.50	6.17	521	32.50	7.57	634
126	8.25	24.25	5.81	502	25.00	5.98	514	28.00	6.70	572	34.25	8.20	711
132	8.50	25.50	6.27	527	26.50	6.52	560	29.50	7.25	618	36.00	8.84	754
138	8.75	26.75	6.75	570	27.75	7.00	584	31.00	7.83	658	37.75	9.51	799
144	9.00	28.00	7.24	619	29.00	7.50	654	32.25	8.33	723	39.50	10.20	885
150	9.25	29.25	7.75	665	30.25	8.01	680	33.75	8.94	761	41.25	10.92	933
156	9.50	30.50	8.27	692	31.50	8.54	728	35.25	9.56	805	43.25	11.74	996
162	9.75	31.75	8.81	767	32.75	9.08	783	36.75	10.21	889	45.00	12.50	1094
168	10.00	33.00	9.37	796	34.25	9.73	838	38.00	10.78	919	46.75	13.28	1146
174	10.25	34.25	9.94	847	35.50	10.31	867	39.50	11.46	974	48.50	14.09	1197
180	10.50	35.50	10.53	877	36.75	10.90	920	41.00	12.17	1022	50.25	14.91	1260

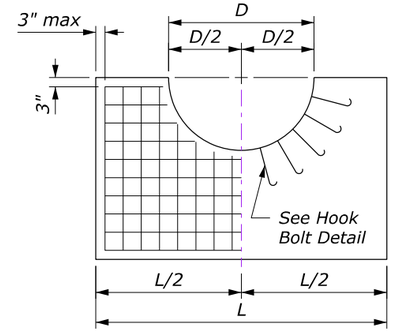

SINGLE PIPE CULVERT

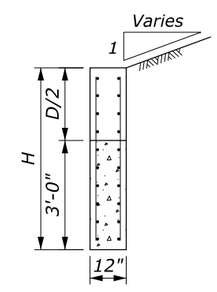

SECTION A-A

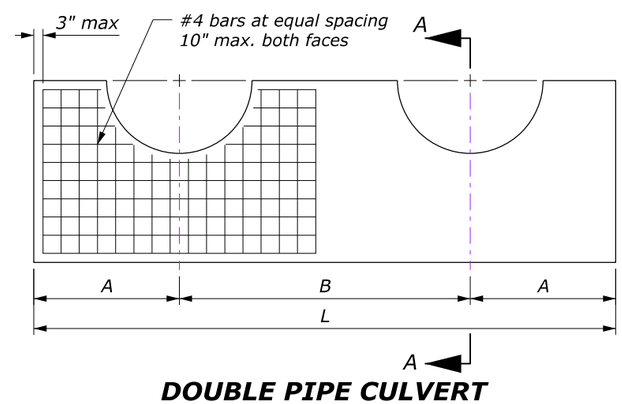

DOUBLE PIPE CULVERT HEADWALLS

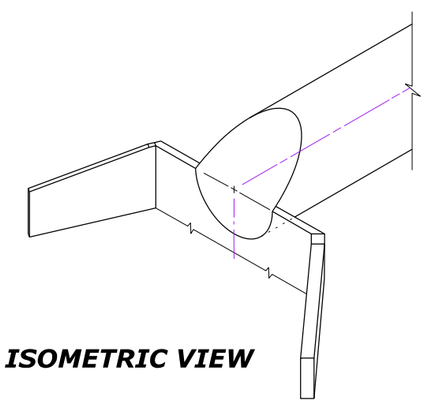

ISOMETRIC VIEW

NO SCALE

U.S. DEPARTMENT OF TRANSPORTATION
FEDERAL HIGHWAY ADMINISTRATION
OFFICE OF FEDERAL LANDS HIGHWAY

FLH STANDARD

CONCRETE HEADWALLS

STANDARD APPROVED FOR USE 6/2005
REVISED: 6/2007

STANDARD 601-1

22 February 2023 9:14 AM c:\pw-work\d0413405\Std601-1.dgn [Std 601-1]

PROJECT	SHEET NUMBER

HEADWALL FOR DOUBLE PIPE CULVERT

DIMENSIONS, REINFORCING STEEL AND CONCRETE TABLE OF QUANTITIES

D mm	H m	SQUARE HEADWALL					15° SKEW					30° SKEW					45° SKEW				
		A m	B m	L m	CONC. m3	STEEL kg	A m	B m	L m	CONC. m3	STEEL kg	A m	B m	L m	CONC. m3	STEEL kg	A m	B m	L m	CONC. m3	STEEL kg
1200	1.500	1.2	1.8	4.2	1.55	80	1.2	1.9	4.3	1.58	81	1.4	2.1	4.9	1.81	92	1.7	2.5	5.9	2.18	111
1350	1.575	1.4	2.0	4.8	1.84	93	1.4	2.1	4.9	1.87	93	1.6	2.3	5.5	2.10	107	2.0	2.9	6.9	2.65	134
1500	1.650	1.6	2.3	5.5	2.19	110	1.6	2.3	5.5	2.17	109	1.8	2.6	6.2	2.46	124	2.2	3.2	7.6	3.01	149
1650	1.725	1.8	2.5	6.1	2.52	129	1.8	2.6	6.2	2.54	133	2.0	2.9	6.9	2.83	146	2.5	3.5	8.5	3.49	182
1800	1.800	2.0	2.7	6.7	2.85	147	2.0	2.8	6.8	2.88	147	2.3	3.1	7.7	3.28	168	2.8	3.8	9.4	4.00	204
1950	1.875	2.1	2.9	7.1	3.10	155	2.2	3.0	7.4	3.23	162	2.5	3.4	8.4	3.69	184	3.0	4.1	10.1	4.41	222
2100	1.950	2.3	3.2	7.8	3.52	183	2.4	3.3	8.1	3.66	191	2.7	3.6	9.0	4.07	213	3.3	4.5	11.1	5.02	263
2250	2.025	2.5	3.4	8.4	3.91	199	2.6	3.5	8.7	4.05	211	2.9	3.9	9.7	4.52	234	3.6	4.8	12.0	5.60	291
2400	2.100	2.7	3.6	9.0	4.31	219	2.8	3.7	9.3	4.45	227	3.1	4.2	10.4	4.98	252	3.8	5.1	12.7	6.08	311
2550	2.175	2.9	3.8	9.6	4.73	247	3.0	3.9	9.9	4.87	255	3.3	4.3	10.9	5.34	279	4.1	5.3	13.5	6.64	351
2700	2.250	3.1	3.9	10.1	5.10	265	3.2	4.0	10.4	5.24	271	3.6	4.5	11.7	5.91	309	4.3	5.5	14.1	7.09	369
2850	2.325	3.3	4.0	10.6	5.48	281	3.4	4.2	11.0	5.69	293	3.8	4.7	12.3	6.37	328	4.6	5.7	14.9	7.69	393
3000	2.400	3.5	4.2	11.2	5.94	304	3.6	4.3	11.5	6.08	309	4.0	4.8	12.8	6.77	344	4.9	5.9	15.7	8.31	424
3150	2.475	3.6	4.3	11.5	6.20	325	3.8	4.5	12.1	6.56	341	4.2	5.0	13.4	7.25	378	5.1	6.2	16.4	8.87	463
3300	2.550	3.8	4.5	12.1	6.69	345	4.0	4.7	12.7	7.06	366	4.4	5.2	14.0	7.75	402	5.4	6.4	17.2	9.53	494
3450	2.625	4.0	4.7	12.7	7.20	370	4.2	4.8	13.2	7.49	384	4.6	5.4	14.6	8.26	419	5.7	6.6	18.0	10.21	524
3600	2.700	4.2	4.8	13.2	7.64	403	4.3	5.0	13.6	7.85	410	4.8	5.5	15.1	8.70	454	5.9	6.8	18.6	10.75	565
3750	2.775	4.4	5.0	13.8	8.18	424	4.5	5.1	14.1	8.31	429	5.1	5.7	15.9	9.41	485	6.2	7.0	19.4	11.46	593
3900	2.850	4.6	5.1	14.3	8.64	444	4.7	5.3	14.7	8.86	456	5.3	5.9	16.5	9.97	512	6.5	7.2	20.2	12.20	630
4050	2.925	4.8	5.3	14.9	9.21	482	4.9	5.4	15.2	9.34	493	5.5	6.1	17.1	10.54	554	6.7	7.4	20.8	12.79	676
4200	3.000	5.0	5.4	15.4	9.70	503	5.1	5.6	15.8	9.92	516	5.7	6.2	17.6	11.04	574	7.0	7.6	21.6	13.56	706
4350	3.075	5.1	5.5	15.7	10.02	518	5.3	5.7	16.3	10.42	536	5.9	6.4	18.2	11.64	603	7.3	7.8	22.4	14.36	740
4500	3.150	5.3	5.7	16.3	10.63	542	5.5	5.9	16.9	11.03	560	6.1	6.6	18.8	12.26	627	7.5	8.1	23.1	15.08	773

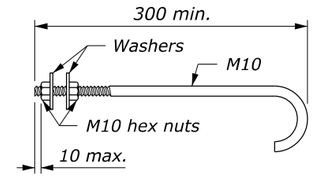

HOOK BOLT DETAIL

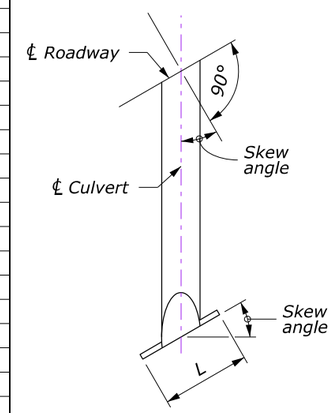

TYPICAL HALF PLAN

NOTE:

1. Concrete conforms to Section 601. Pour concrete monolithically. Chamfer all exposed edges 20 mm and finish all exposed surfaces with a Class 1 ordinary finish.
2. Clearance for reinforcing steel is 50 mm unless otherwise noted.
3. Headwall dimension "H" may be reduced in solid rock provided the wall is keyed into the rock at least 300 mm. Excavate and backfill according to Section 209.
4. Set hook bolts on nominal 450 mm centers around pipe perimeter at center of headwall. Hook bolts conform to ASTM A307. Galvanize according to ASTM A153.
5. For installations with more than two pipe culverts, increase the dimension "L" and all quantities shown for double pipe installation by adding a length equal to dimension "B" and the incremental change in quantities for each additional pipe culvert.
6. For skews other than those shown, multiply quantities and dimensions "A", "B" & "L" for square headwalls by secant of the skew angle.
7. Final quantities will be determined by using the tables on this standard.
8. Do not order materials until the length, skew angle, and slope bevel in the field have been approved.
9. Dimensions without units are millimeters.

HEADWALL FOR SINGLE PIPE CULVERT

DIMENSIONS, REINFORCING STEEL AND CONCRETE TABLE OF QUANTITIES

D mm	H m	SQUARE HEADWALL			15° SKEW			30° SKEW			45° SKEW		
		L m	CONC. m3	STEEL kg	L m	CONC. m3	STEEL kg	L m	CONC. m3	STEEL kg	L m	CONC. m3	STEEL kg
1200	1.500	2.4	0.91	45	2.5	0.95	49	2.8	1.06	54	3.4	1.29	65
1350	1.575	2.8	1.11	56	2.9	1.15	57	3.2	1.26	66	3.9	1.54	78
1500	1.650	3.2	1.32	67	3.3	1.36	68	3.6	1.48	73	4.5	1.85	94
1650	1.725	3.5	1.49	78	3.6	1.53	79	4.1	1.75	91	5.0	2.13	112
1800	1.800	3.9	1.72	87	4.0	1.76	92	4.5	1.99	103	5.5	2.43	127
1950	1.875	4.3	1.97	99	4.4	2.01	100	4.9	2.24	111	6.0	2.74	140
2100	1.950	4.7	2.23	119	4.8	2.27	120	5.4	2.56	134	6.6	3.13	164
2250	2.025	5.0	2.44	126	5.2	2.54	133	5.8	2.83	146	7.1	3.47	181
2400	2.100	5.4	2.72	138	5.6	2.83	145	6.2	3.12	162	7.6	3.83	196
2550	2.175	5.8	3.02	159	6.0	3.12	166	6.7	3.49	186	8.2	4.27	228
2700	2.250	6.2	3.33	175	6.4	3.43	179	7.1	3.80	199	8.7	4.66	247
2850	2.325	6.5	3.58	187	6.8	3.75	193	7.5	4.13	214	9.2	5.06	264
3000	2.400	6.9	3.91	197	7.1	4.01	205	8.0	4.54	234	9.8	5.56	284
3150	2.475	7.3	4.25	225	7.5	4.36	229	8.4	4.89	255	10.3	5.99	318
3300	2.550	7.7	4.61	241	7.9	4.72	244	8.8	5.25	275	10.8	6.45	337
3450	2.625	8.0	4.90	254	8.3	5.08	260	9.3	5.70	294	11.3	6.92	356
3600	2.700	8.4	5.28	276	8.7	5.47	292	9.7	6.09	323	11.9	7.48	396
3750	2.775	8.8	5.67	297	9.1	5.86	304	10.1	6.50	339	12.4	7.98	417
3900	2.850	9.2	6.07	315	9.5	6.27	326	10.6	6.99	360	12.9	8.50	437
4050	2.925	9.5	6.40	342	9.9	6.69	351	11.0	7.42	396	13.5	9.11	488
4200	3.000	9.9	6.83	355	10.2	7.03	372	11.4	7.86	410	14.0	9.66	511
4350	3.075	10.3	7.27	379	10.6	7.47	386	11.9	8.40	436	14.5	10.22	533
4500	3.150	10.7	7.73	399	11.0	7.93	410	12.3	8.87	456	15.1	10.90	563

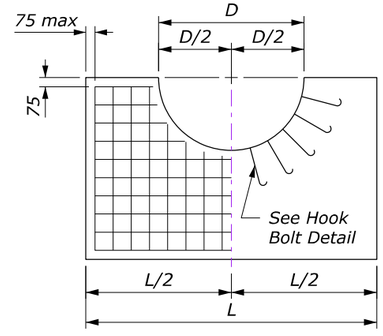

SINGLE PIPE CULVERT

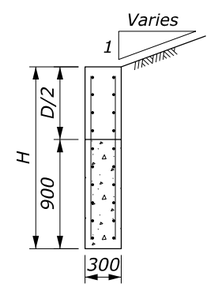

SECTION A-A

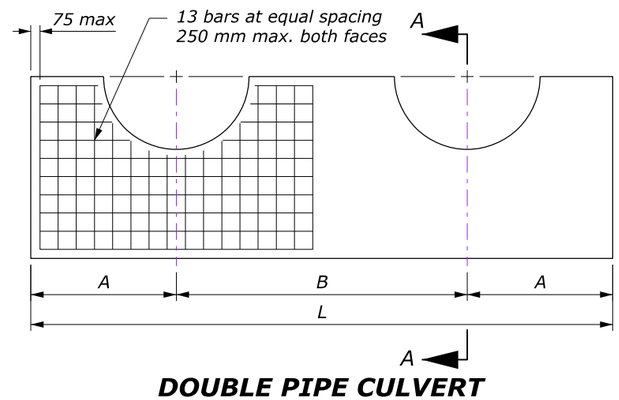

DOUBLE PIPE CULVERT HEADWALLS

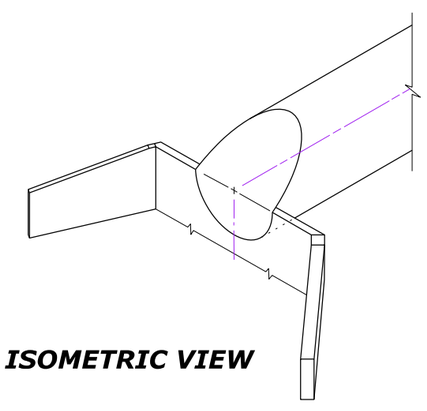

ISOMETRIC VIEW

NO SCALE

U.S. DEPARTMENT OF TRANSPORTATION
FEDERAL HIGHWAY ADMINISTRATION
OFFICE OF FEDERAL LANDS HIGHWAY

METRIC FLH STANDARD

CONCRETE HEADWALLS

STANDARD APPROVED FOR USE 3/1996
REVISED: 5/1997 6/2005

STANDARD M601-1

c:\pw-work\d0147408\Std601-1.dgn (Std M601-1)
22 February 2023 11:11 AM

PROJECT	SHEET NUMBER

SLOPE PAVING FOR DOUBLE PIPE CULVERT

DIMENSIONS, REINFORCING STEEL AND CONCRETE TABLE OF QUANTITIES

D INCH	S FEET	SQUARE HEADWALL			15° SKEW			30° SKEW			45° SKEW		
		L FEET	CONC. CUYD	STEEL LB	L FEET	CONC. CUYD	STEEL LB	L FEET	CONC. CUYD	STEEL LB	L FEET	CONC. CUYD	STEEL LB
48	7.25	14.00	1.57	83	14.75	1.66	89	16.00	1.79	94	20.00	2.25	119
54	7.75	16.25	1.93	104	16.50	1.95	103	18.25	2.15	115	22.50	2.65	141
60	8.00	18.00	2.23	116	18.75	2.33	122	20.75	2.57	135	25.50	3.17	164
66	8.50	20.25	2.64	139	20.50	2.66	138	23.00	2.99	156	28.25	3.67	192
72	9.00	22.00	2.99	155	22.75	3.09	161	25.50	3.47	180	31.25	4.26	221
78	9.50	24.25	3.46	181	25.00	3.56	185	27.75	3.94	205	33.75	4.78	249
84	10.00	26.00	3.84	199	26.75	3.95	205	30.00	4.43	231	36.75	5.43	283
90	10.25	28.25	4.36	216	29.25	4.52	225	32.50	5.01	248	39.50	6.07	301
96	10.75	30.00	4.79	241	31.00	4.95	249	34.75	5.56	280	42.50	6.79	339
102	11.25	32.00	5.30	265	33.00	5.46	274	36.50	6.02	302	44.75	7.38	371
108	11.75	33.50	5.71	288	34.50	5.87	295	38.50	6.55	329	47.50	8.11	406
114	12.25	35.50	6.26	315	36.50	6.42	323	40.50	7.11	359	50.00	8.81	442
120	12.50	37.00	6.71	335	38.50	7.00	347	42.75	7.75	386	52.25	9.47	472
126	13.00	39.00	7.30	363	40.00	7.46	372	44.75	8.35	417	55.00	10.28	510
132	13.50	40.50	7.78	386	42.00	8.07	401	46.75	8.98	448	57.25	10.99	548
138	14.00	42.50	8.41	420	43.50	8.56	428	49.00	9.69	482	60.00	11.87	590
144	14.50	44.00	8.92	445	45.50	9.22	460	51.00	10.36	515	62.25	12.63	630
150	14.75	46.00	9.60	463	47.50	9.90	477	53.00	11.05	532	64.75	13.48	649
156	15.25	47.50	10.14	494	49.00	10.44	510	54.75	11.68	571	67.00	14.29	694
162	15.75	49.50	10.86	532	51.00	11.17	545	56.75	12.41	607	69.75	15.28	746
168	16.25	51.00	11.44	559	52.75	11.83	579	58.75	13.16	644	72.00	16.13	787
174	16.75	53.00	12.20	595	54.75	12.59	619	60.75	13.93	681	74.75	17.19	841
180	17.25	54.50	12.81	628	56.75	13.38	656	63.00	14.82	726	76.75	18.00	880

SLOPE PAVING FOR SINGLE PIPE CULVERT

DIMENSIONS, REINFORCING STEEL AND CONCRETE TABLE OF QUANTITIES

D INCH	S FEET	SQUARE HEADWALL			15° SKEW			30° SKEW			45° SKEW		
		L FEET	CONC. CUYD	STEEL LB	L FEET	CONC. CUYD	STEEL LB	L FEET	CONC. CUYD	STEEL LB	L FEET	CONC. CUYD	STEEL LB
48	7.25	8.00	0.93	48	8.25	0.96	50	9.25	1.08	57	11.25	1.31	69
54	7.75	9.25	1.14	60	9.50	1.17	61	10.75	1.33	70	13.00	1.60	83
60	8.00	10.50	1.37	69	10.75	1.39	72	12.00	1.56	79	14.75	1.92	98
66	8.50	11.75	1.61	82	12.25	1.68	86	13.50	1.85	94	16.50	2.25	115
72	9.00	13.00	1.87	95	13.50	1.94	98	15.00	2.15	109	18.50	2.66	136
78	9.50	14.25	2.14	110	14.75	2.22	113	16.50	2.48	126	20.25	3.05	157
84	10.00	15.50	2.44	123	16.00	2.51	128	18.00	2.83	143	22.00	3.46	175
90	10.25	16.75	2.75	134	17.25	2.82	139	19.25	3.15	154	23.75	3.90	190
96	10.75	18.00	3.07	150	18.75	3.21	159	20.75	3.54	174	25.50	4.35	213
102	11.25	19.25	3.41	170	20.00	3.55	174	22.25	3.95	196	27.25	4.83	239
108	11.75	20.50	3.77	186	21.25	3.91	193	23.75	4.38	217	29.00	5.34	263
114	12.25	21.75	4.15	206	22.50	4.29	212	25.00	4.76	235	30.75	5.86	291
120	12.50	23.00	4.54	220	23.75	4.69	230	26.50	5.23	255	32.50	6.42	313
126	13.00	24.25	4.95	244	25.00	5.10	249	28.00	5.72	278	34.25	6.99	343
132	13.50	25.50	5.38	263	26.50	5.59	272	29.50	6.22	303	36.00	7.59	371
138	14.00	26.75	5.82	286	27.75	6.04	296	31.00	6.75	329	37.75	8.21	401
144	14.50	28.00	6.28	306	29.00	6.50	316	32.25	7.23	354	39.50	8.85	431
150	14.75	29.25	6.75	320	30.25	6.98	333	33.75	7.79	370	41.25	9.52	452
156	15.25	30.50	7.25	347	31.50	7.48	357	35.25	8.38	401	43.25	10.29	493
162	15.75	31.75	7.76	373	32.75	7.99	384	36.75	8.99	433	45.00	11.00	526
168	16.25	33.00	8.28	397	34.25	8.60	413	38.00	9.53	458	46.75	11.74	565
174	16.75	34.25	8.83	424	35.50	9.15	438	39.50	10.17	488	48.50	12.50	600
180	17.25	35.50	9.39	449	36.75	9.72	469	41.00	10.84	521	50.25	13.29	641

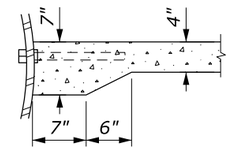

SECTION A-A

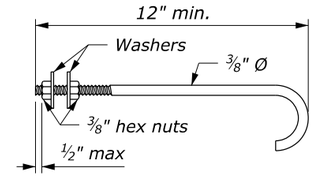

HOOK BOLT DETAIL

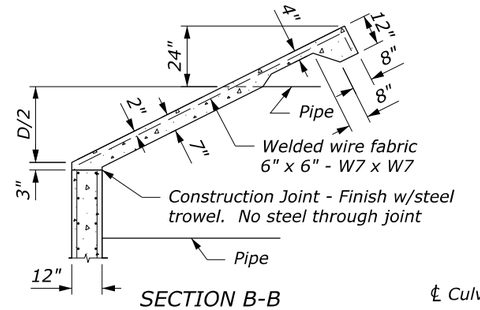

SECTION B-B

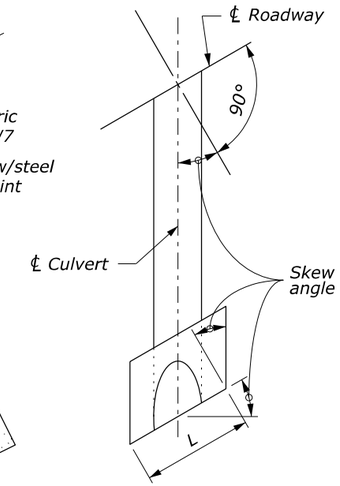

TYPICAL HALF PLAN

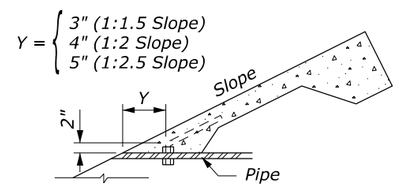

SECTION C-C

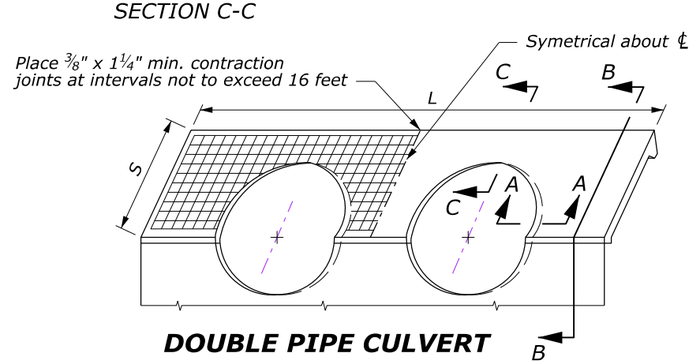

DOUBLE PIPE CULVERT

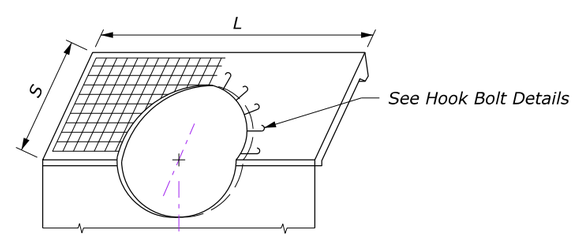

SINGLE PIPE CULVERT

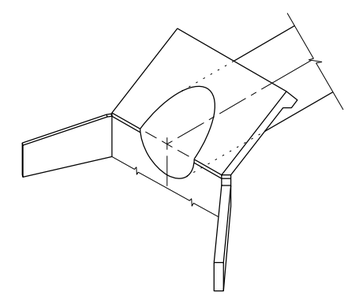

ISOMETRIC VIEW

NO SCALE

NOTE:

1. Concrete conforms to Section 601. Chamfer all exposed edges 3/4" and finish all exposed surfaces with a Class 1 ordinary finish.
2. Clearance for reinforcing steel is 2" unless otherwise noted.
3. Set hook bolts on nominal 18" centers around pipe perimeter. Hook bolts conform to ASTM A307. Galvanize according to ASTM A153.
4. For installations with more than two pipe culverts, increase the dimension "L" and all quantities shown for double pipe installation by adding a length equal to dimension "B" as shown on Standard 601-1 and the incremental change in quantities for each additional pipe culvert.
5. For skews other than those shown, multiply quantities and dimensions "A", "B" & "L" for square headwalls by secant of the skew angle.
6. For the skew angle shown, the dimension "S" and the quantities for slope paving are computed for a 1V:1.5H sideslope. To compute dimension "S" and slope paving quantities for a 1V:2H slope multiply the values for that particular skew by 1.24, and for a 1V:2.5H slope multiply by 1.49.
7. Final quantities will be determined by using the tables on this standard.
8. Do not order materials until the length, skew angle, and slope bevel in the field have been approved.

U.S. DEPARTMENT OF TRANSPORTATION
FEDERAL HIGHWAY ADMINISTRATION
OFFICE OF FEDERAL LANDS HIGHWAY

FLH STANDARD

SLOPE PAVING FOR CONCRETE HEADWALLS

STANDARD APPROVED FOR USE 6/2005
REVISED:

STANDARD 601-2

c:\pw-work\d0413405\Std601-2.dgn [Std 601-2]
9 February 2023 5:20 PM

PROJECT	SHEET NUMBER

SLOPE PAVING FOR DOUBLE PIPE CULVERT

DIMENSIONS, REINFORCING STEEL AND CONCRETE TABLE OF QUANTITIES

D	S m	SQUARE HEADWALL			15° SKEW			30° SKEW			45° SKEW		
		L m	CONC. m3	STEEL kg	L m	CONC. m3	STEEL kg	L m	CONC. m3	STEEL kg	L m	CONC. m3	STEEL kg
1200	2.2	4.2	1.14	38	4.3	1.17	39	4.9	1.34	44	5.9	1.60	52
1350	2.3	4.8	1.38	45	4.9	1.40	46	5.5	1.57	51	6.9	1.99	64
1500	2.4	5.5	1.67	51	5.5	1.65	51	6.2	1.87	57	7.6	2.29	69
1650	2.6	6.1	1.94	62	6.2	1.96	63	6.9	2.18	70	8.5	2.69	86
1800	2.7	6.7	2.23	68	6.8	2.24	69	7.7	2.55	78	9.4	3.11	95
1950	2.8	7.1	2.44	74	7.4	2.55	77	8.4	2.91	89	10.1	3.47	106
2100	3.0	7.8	2.80	87	8.1	2.91	91	9.0	3.23	101	11.1	4.00	123
2250	3.1	8.4	3.14	97	8.7	3.25	101	9.7	3.63	111	12.0	4.50	138
2400	3.2	9.0	3.49	107	9.3	3.61	110	10.4	4.04	123	12.7	4.93	150
2550	3.4	9.6	3.86	120	9.9	3.98	122	10.9	4.36	134	13.5	5.42	166
2700	3.5	10.1	4.19	128	10.4	4.31	132	11.7	4.86	148	14.1	5.82	178
2850	3.7	10.6	4.54	140	11.0	4.71	146	12.3	5.27	162	14.9	6.36	195
3000	3.8	11.2	4.95	152	11.5	5.07	155	12.8	5.63	172	15.7	6.92	211
3150	3.9	11.5	5.19	153	12.1	5.50	163	13.4	6.07	180	16.4	7.43	219
3300	4.1	12.1	5.64	173	12.7	5.95	182	14.0	6.53	199	17.2	8.03	246
3450	4.2	12.7	6.10	183	13.2	6.35	190	14.6	7.00	209	18.0	8.65	259
3600	4.3	13.2	6.50	194	13.6	6.69	199	15.1	7.41	221	18.6	9.15	271
3750	4.5	13.8	7.00	210	14.1	7.10	214	15.9	8.06	241	19.4	9.81	293
3900	4.6	14.3	7.43	221	14.7	7.61	227	16.5	8.57	255	20.2	10.49	312
4050	4.7	14.9	7.96	235	15.2	8.06	239	17.1	9.11	270	20.8	11.04	326
4200	4.9	15.4	8.42	253	15.8	8.60	257	17.6	9.57	286	21.6	11.76	350
4350	5.0	15.7	8.72	260	16.3	9.07	270	18.2	10.14	300	22.4	12.51	370
4500	5.1	16.3	9.29	269	16.9	9.64	280	18.8	10.71	309	23.1	13.19	379

SLOPE PAVING FOR SINGLE PIPE CULVERT

DIMENSIONS, REINFORCING STEEL AND CONCRETE TABLE OF QUANTITIES

D	S m	SQUARE HEADWALL			15° SKEW			30° SKEW			45° SKEW		
		L m	CONC. m3	STEEL kg	L m	CONC. m3	STEEL kg	L m	CONC. m3	STEEL kg	L m	CONC. m3	STEEL kg
1200	2.2	2.4	0.68	22	2.5	0.71	23	2.8	0.79	26	3.4	0.96	31
1350	2.3	2.8	0.84	27	2.9	0.87	27	3.2	0.96	30	3.9	1.17	37
1500	2.4	3.2	1.02	30	3.3	1.05	31	3.6	1.14	34	4.5	1.43	43
1650	2.6	3.5	1.16	36	3.6	1.19	37	4.1	1.37	43	5.0	1.67	52
1800	2.7	3.9	1.36	41	4.0	1.39	42	4.5	1.57	47	5.5	1.92	58
1950	2.8	4.3	1.57	47	4.4	1.61	48	4.9	1.79	53	6.0	2.19	66
2100	3.0	4.7	1.80	54	4.8	1.83	56	5.4	2.07	63	6.6	2.52	77
2250	3.1	5.0	1.99	59	5.2	2.07	63	5.8	2.31	71	7.1	2.83	86
2400	3.2	5.4	2.24	67	5.6	2.32	69	6.2	2.57	77	7.6	3.15	93
2550	3.4	5.8	2.50	76	6.0	2.59	78	6.7	2.89	87	8.2	3.54	106
2700	3.5	6.2	2.78	83	6.4	2.87	86	7.1	3.18	95	8.7	3.89	117
2850	3.7	6.5	3.01	91	6.8	3.16	96	7.5	3.47	105	9.2	4.26	129
3000	3.8	6.9	3.31	99	7.1	3.40	102	8.0	3.84	115	9.8	4.71	141
3150	3.9	7.3	3.63	105	7.5	3.72	108	8.4	4.17	121	10.3	5.11	148
3300	4.1	7.7	3.95	119	7.9	4.04	120	8.8	4.50	134	10.8	5.53	165
3450	4.2	8.0	4.22	124	8.3	4.39	129	9.3	4.92	145	11.3	5.96	176
3600	4.3	8.4	4.58	134	8.7	4.74	139	9.7	5.29	155	11.9	6.49	190
3750	4.5	8.8	4.94	145	9.1	5.11	150	10.1	5.66	167	12.4	6.96	205
3900	4.6	9.2	5.32	156	9.5	5.49	161	10.6	6.13	179	12.9	7.44	218
4050	4.7	9.5	5.63	164	9.9	5.89	170	11.0	6.53	191	13.5	8.02	232
4200	4.9	9.9	6.04	176	10.2	6.21	182	11.4	6.95	203	14.0	8.54	249
4350	5.0	10.3	6.46	189	10.6	6.63	194	11.9	7.46	218	14.5	9.07	264
4500	5.1	10.7	6.89	197	11.0	7.06	201	12.3	7.90	224	15.1	9.71	276

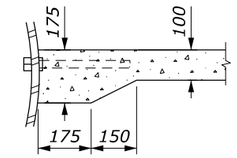

SECTION A-A

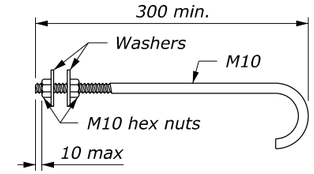

HOOK BOLT DETAIL

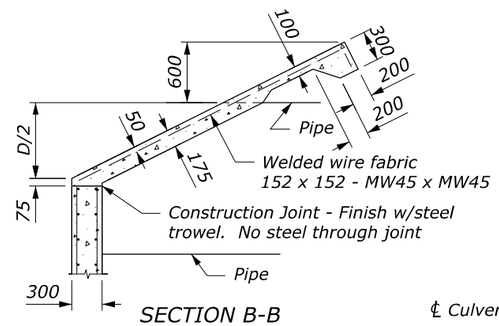

SECTION B-B

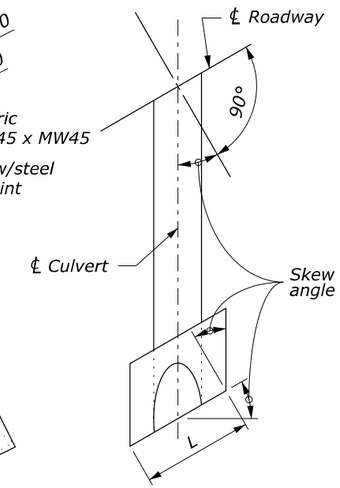

TYPICAL HALF PLAN

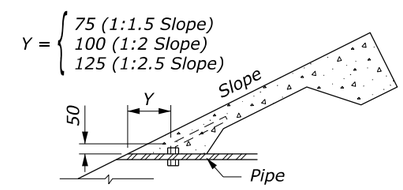

SECTION C-C

NOTE:

1. Concrete conforms to Section 601. Chamfer all exposed edges 20 mm and finish all exposed surfaces with a Class 1 ordinary finish.
2. Clearance for reinforcing steel is 50 mm unless otherwise noted.
3. Set hook bolts on nominal 450 mm centers around pipe perimeter. Hook bolts conform to ASTM A307. Galvanize according to ASTM A153.
4. For installations with more than two pipe culverts, increase the dimension "L" and all quantities shown for double pipe installation by adding a length equal to dimension "B" as shown on Standard M601-1 and the incremental change in quantities for each additional pipe culvert.
5. For skews other than those shown, multiply quantities and dimensions "A", "B" & "L" for square headwalls by secant of the skew angle.
6. For the skew angle shown, the dimension "S" and the quantities for slope paving are computed for a 1V:1.5H sideslope. To compute dimension "S" and slope paving quantities for a 1V:2H slope multiply the values for that particular skew by 1.24, and for a 1V:2.5H slope multiply by 1.49.
7. Final quantities will be determined by using the tables on this standard.
8. Do not order materials until the length, skew angle, and slope bevel in the field have been approved.
9. Dimensions without units are millimeters.

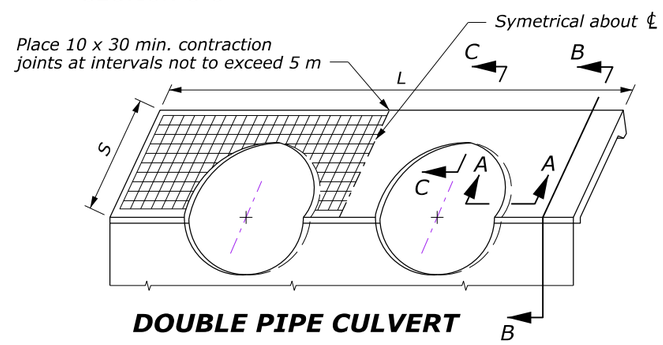

DOUBLE PIPE CULVERT

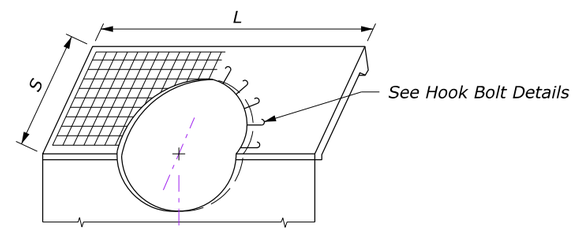

SINGLE PIPE CULVERT

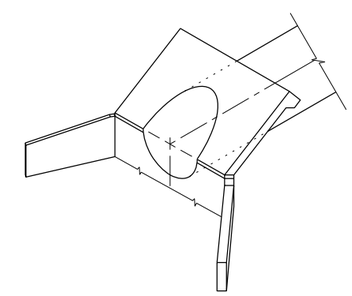

ISOMETRIC VIEW

NO SCALE

U.S. DEPARTMENT OF TRANSPORTATION
FEDERAL HIGHWAY ADMINISTRATION
OFFICE OF FEDERAL LANDS HIGHWAY

METRIC FLH STANDARD

SLOPE PAVING FOR CONCRETE HEADWALLS

STANDARD APPROVED FOR USE 3/1996
REVISED: 5/1997 6/2005

STANDARD
M601-2

22 February 2023 11:13 AM c:\pw-work\d0147408\Std601-2.dgn [Std M601-2]

PROJECT	SHEET NUMBER

WINGWALLS FOR CONCRETE HEADWALLS

DIMENSIONS, REINFORCING STEEL AND CONCRETE TABLE OF QUANTITIES

D INCH	H FEET	0° WINGWALL SKEW			15° WINGWALL SKEW			30° WINGWALL SKEW			45° WINGWALL SKEW			60° WINGWALL SKEW		
		W FEET	CONC. CUYD	STEEL LB	W FEET	CONC. CUYD	STEEL LB	W FEET	CONC. CUYD	STEEL LB	W FEET	CONC. CUYD	STEEL LB	W FEET	CONC. CUYD	STEEL LB
48	5.00	6.00	2.81	178	6.00	2.78	178	6.00	2.76	178	6.00	2.74	178	6.00	2.73	178
54	5.25	6.00	2.86	180	6.00	2.82	180	6.00	2.80	180	6.00	2.78	180	6.75	3.06	202
60	5.50	6.25	2.90	181	6.00	2.86	181	6.00	2.84	181	6.00	2.82	181	7.50	3.39	224
66	5.75	7.00	2.94	183	6.00	2.90	183	6.00	2.87	183	6.00	2.85	183	8.25	3.74	241
72	6.00	7.50	2.98	185	6.00	2.94	185	6.00	2.91	185	6.50	3.09	202	9.00	4.09	263
78	6.25	8.25	3.02	186	6.00	2.98	186	6.00	2.95	186	7.00	3.34	213	9.75	4.45	285
84	6.50	8.75	3.06	188	6.00	3.02	188	6.25	3.09	197	7.50	3.59	232	10.50	4.81	311
90	6.75	9.50	3.11	190	6.00	3.06	190	6.50	3.24	207	8.00	3.84	246	11.25	5.18	329
96	7.00	10.00	3.15	191	6.25	3.21	200	7.00	3.49	218	8.50	4.10	260	12.00	5.56	350

RECOMMENDED WINGWALL SKEWS

WINGWALL	PIPE SKEW			
	0°	15°	30°	45°
1	45°	45°	60°	60°
2	45°	30°	15°	0°
3	45°	30°	15°	0°
4	45°	45°	60°	60°

NOTE:

1. Concrete conforms to Section 601. Chamfer all exposed edges ¾-inch and finish all exposed surfaces with a Class 1 ordinary finish.
2. Reinforcing steel clearance is 2-inches unless otherwise noted.
3. For skew angles shown in table, the length W and quantities for wingwalls are computed for a 1V:1.5H side slope. For 1V:2H or 1V:2.5H slopes compute length W with the following equation:
   W = D/2 × slope × secant (wingwall skew angle)
   Minimum W not less than 6 feet.
4. Quantities shown in table are for one wingwall only. For lengths W not shown in table, approximate the quantities by multiplying the quantities for 0° skew and a given height H by the factor: 1 + [(W-6.0) × 0.14].
5. See Standards 601-1 and 601-2 for headwall and slope paving dimensions.
6. Final quantities will be determined by using the tables on this standard.
7. Do not order materials until the length, skew angle, and slope bevel in the field have been approved.

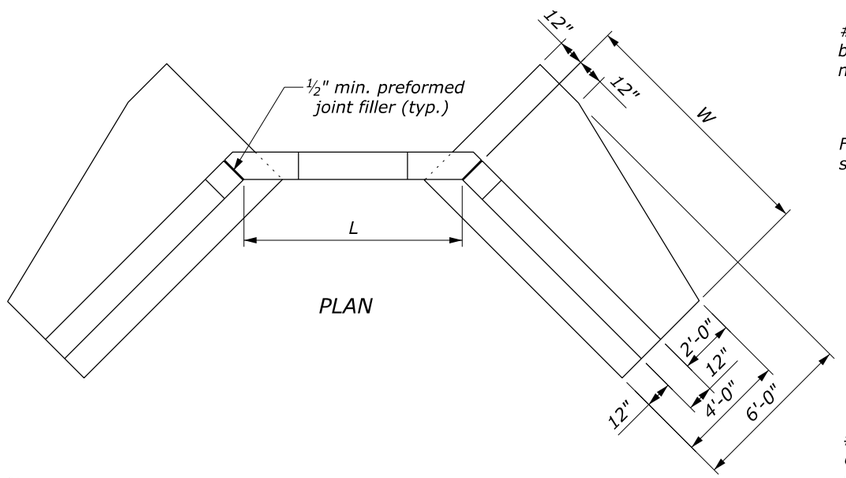

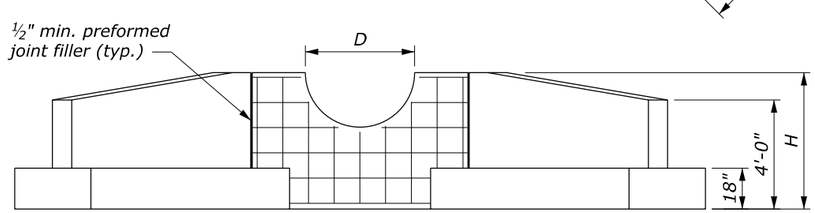

ELEVATION

HEADWALL AND WINGWALL

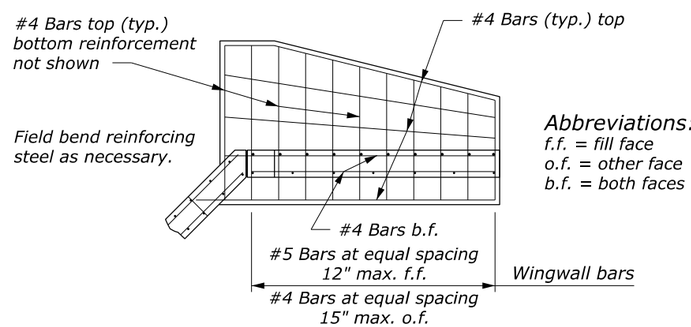

PLAN

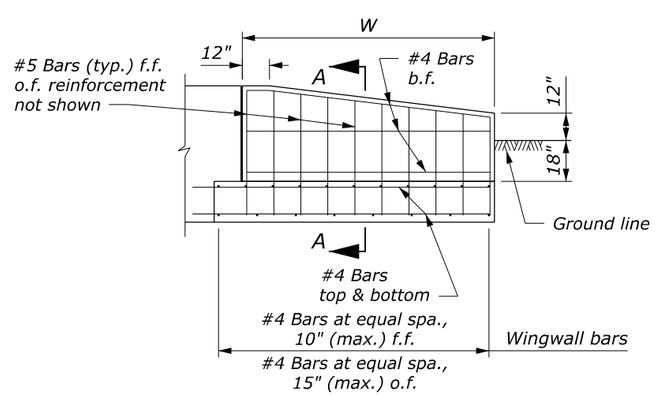

ELEVATION

TYPICAL WINGWALL

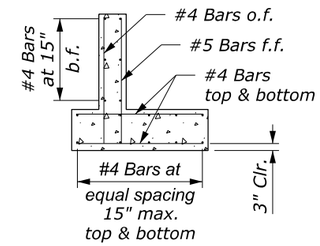

SECTION A-A

Abbreviations:
f.f. = fill face
o.f. = other face
b.f. = both faces

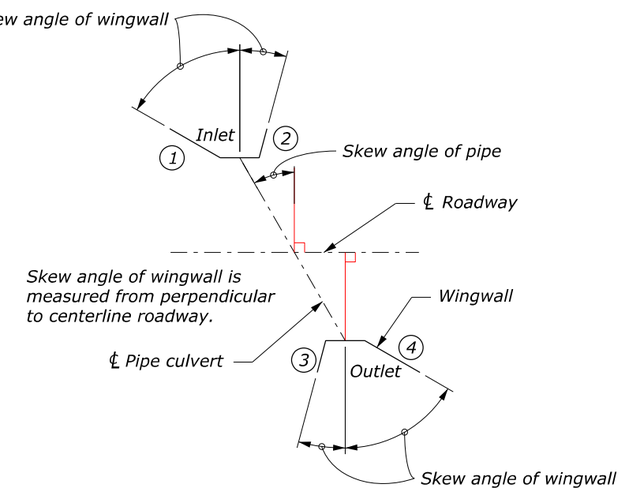

WINGWALL LAYOUT

NO SCALE

U.S. DEPARTMENT OF TRANSPORTATION
FEDERAL HIGHWAY ADMINISTRATION
OFFICE OF FEDERAL LANDS HIGHWAY

FLH STANDARD

WINGWALLS FOR CONCRETE HEADWALLS

STANDARD APPROVED FOR USE 6/2005
REVISED: 6/2007

STANDARD 601-3

20 September 2022 11:21 AM C:\Users\Stephen.Chapman\OneDrive - DOT OST\CADD\cells\FLH-Cells.cel [Base.B.US]

PROJECT	SHEET NUMBER

WINGWALLS FOR CONCRETE HEADWALLS

DIMENSIONS, REINFORCING STEEL AND CONCRETE TABLE OF QUANTITIES

D	H	0° WINGWALL SKEW			15° WINGWALL SKEW			30° WINGWALL SKEW			45° WINGWALL SKEW			60° WINGWALL SKEW		
	m	W m	CONC. m3	STEEL kg	W m	CONC. m3	STEEL kg	W m	CONC. m3	STEEL kg	W m	CONC. m3	STEEL kg	W m	CONC. m3	STEEL kg
1200	1.500	1.8	2.05	80	1.8	2.03	80	1.8	2.01	80	1.8	2.00	80	1.8	1.99	80
1350	1.575	1.8	2.08	80	1.8	2.06	80	1.8	2.04	80	1.8	2.03	80	2.1	2.30	92
1500	1.650	1.8	2.11	81	1.8	2.09	81	1.8	2.07	81	1.8	2.05	81	2.3	2.52	101
1650	1.725	1.8	2.14	82	1.8	2.12	82	1.8	2.10	82	1.8	2.08	82	2.5	2.75	108
1800	1.800	1.8	2.17	82	1.8	2.15	82	1.8	2.12	82	2.0	2.30	92	2.7	2.98	117
1950	1.875	1.8	2.20	83	1.8	2.17	83	1.8	2.15	83	2.1	2.43	95	3.0	3.32	130
2100	1.950	1.8	2.23	84	1.8	2.20	84	1.9	2.28	88	2.3	2.66	104	3.2	3.56	140
2250	2.025	1.8	2.26	85	1.8	2.23	85	2.0	2.41	95	2.4	2.80	110	3.4	3.80	147
2400	2.100	1.8	2.30	85	1.9	2.36	90	2.1	2.54	97	2.6	3.04	117	3.6	4.05	156

RECOMMENDED WINGWALL SKEWS

WINGWALL	PIPE SKEW			
	0°	15°	30°	45°
1	45°	45°	60°	60°
2	45°	30°	15°	0°
3	45°	30°	15°	0°
4	45°	45°	60°	60°

NOTE:

1. Concrete conforms to Section 601. Chamfer all exposed edges 20 mm and finish all exposed surfaces with a Class 1 ordinary finish.
2. Reinforcing steel clearance is 50 mm unless otherwise noted.
3. For skew angles shown in table, the length W and quantities for wingwalls are computed for a 1V:1.5H side slope. For 1V:2H or 1V:2.5H slopes compute length W with the following equation:
   W = D/2 × slope × secant (wingwall skew angle)
   Minimum W not less than 1.8 meters.
4. Quantities shown in table are for one wingwall only. For lengths W not shown in table, approximate the quantities by multiplying the quantities for 0° skew and a given height H by the factor: 1 + [(W-1.8) × 0.46].
5. See Standards M601-1 and M601-2 for headwall and slope paving dimensions.
6. Final quantities will be determined by using the tables on this standard.
7. Do not order materials until the length, skew angle, and slope bevel in the field have been approved.
8. Dimensions without units are millimeters.

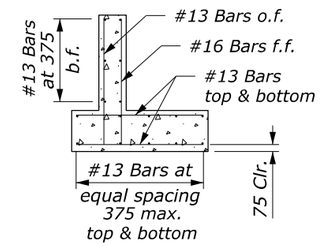

SECTION A-A

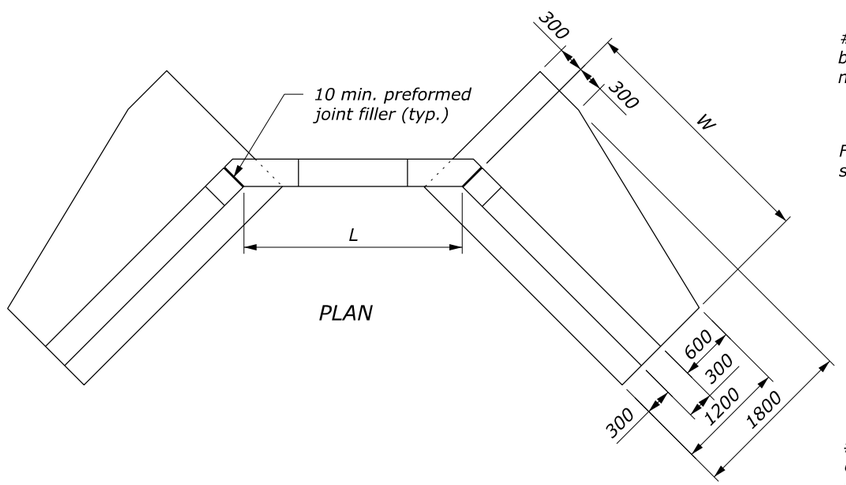

PLAN

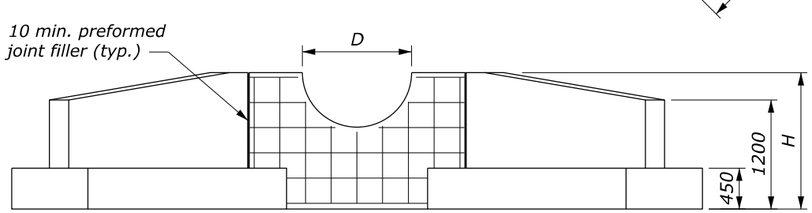

ELEVATION

HEADWALL AND WINGWALL

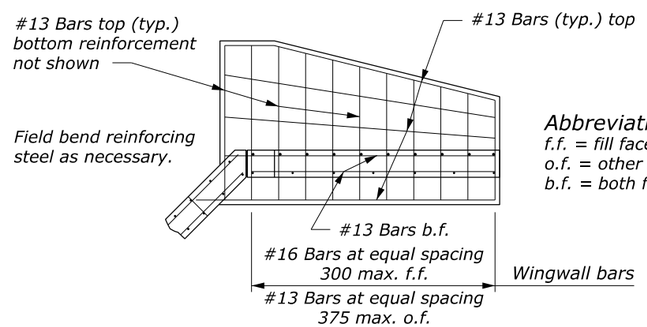

PLAN

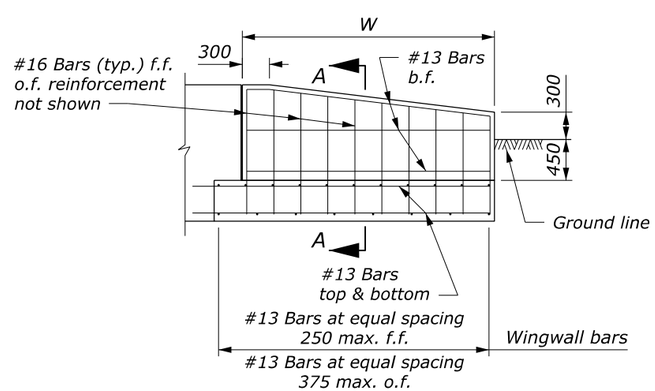

ELEVATION

TYPICAL WINGWALL

Abbreviations:

f.f. = fill face
o.f. = other face
b.f. = both faces

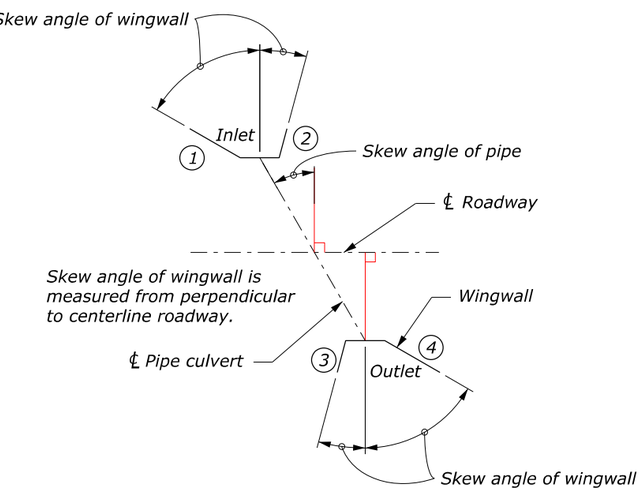

WINGWALL LAYOUT

NO SCALE

U.S. DEPARTMENT OF TRANSPORTATION
FEDERAL HIGHWAY ADMINISTRATION
OFFICE OF FEDERAL LANDS HIGHWAY

METRIC FLH STANDARD

WINGWALLS FOR CONCRETE HEADWALLS

STANDARD APPROVED FOR USE 3/1996
REVISED: 5/1997 6/2005 6/2007

STANDARD M601-3

22 February 2023 11:15 AM c:\pw-work\d0147408\Std601-3.dgn [Std M601-3]

PROJECT	SHEET NUMBER

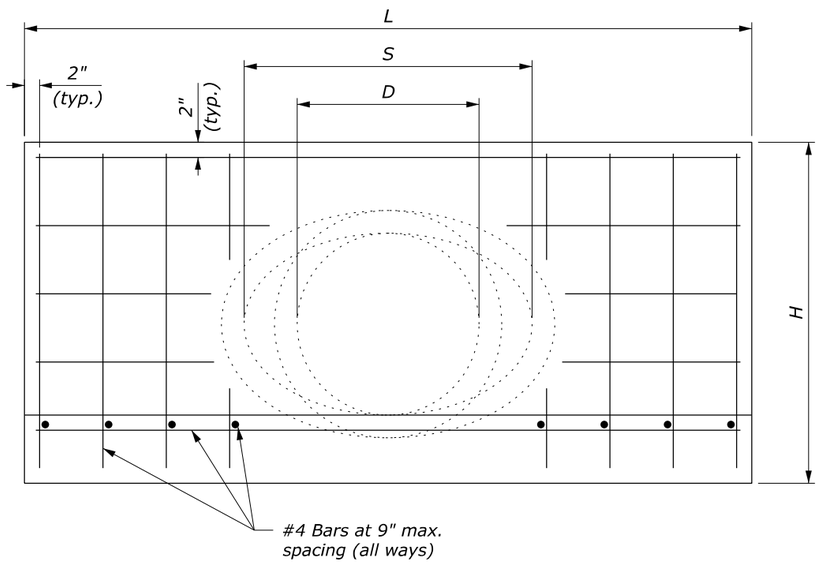

FRONT ELEVATION

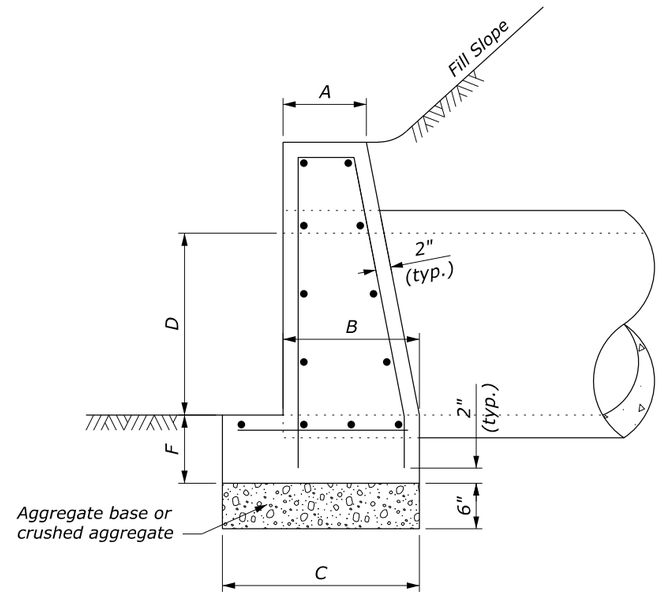

SIDE ELEVATION

NOTE:

1. Orient all headwalls parallel to the roadway centerline unless otherwise indicated in the plans or by the CO.
2. When pipes are on a skew, adapt and lengthen headwalls as directed.
3. Chamfer all exposed corners not rounded to ¾".
4. Quantities shown are for one headwall with pipe at right angles.
5. Construct headwalls using dimensions shown under values for 1V:1.5H slope, unless otherwise designated by the CO.

HEADWALL FOR CIRCULAR PIPE

	DIAMETER OF PIPE CULVERT					
	6"	15"	18"	21" or 24"	27" or 30"	33" or 36"
A	0'-6"	0'-8"	0'-9"	0'-11"	1'-0"	1'-0"
B	0'-9"	1'-1"	1'-3"	1'-6"	1'-9"	2'-0"
C	1'-2"	1'-7"	1'-9"	2'-2"	2'-6"	2'-9"
D	1'-0"	1'-3"	1'-6"	2'-0"	2'-6"	3'-0"
F	0'-6"	0'-8"	0'-8"	0'-9"	0'-9"	0'-9"
H	2'-0"	2'-11"	3'-2"	3'-9"	4'-3"	4'-9"
L	3'-8"	5'-0"	6'-0"	8'-0"	10'-0"	12'-0"
CUBIC YARDS OF CONCRETE						
Conc. Pipe	0.241	0.492	0.697	1.319	2.067	2.947
C.M. Pipe	0.257	0.521	0.739	1.398	2.198	3.145

HEADWALL FOR ELLIPTICAL PIPE

	SIZE OF ELLIPTICAL PIPE CULVERT (SPAN x RISE)									
	23" x 14"	30" x 19"	34" x 22"	38" x 24"	42" x 27"	45" x 29"	49" x 32"	53" x 34"	60" x 38"	68" x 43"
A	0'-8"	0'-9"	0'-10"	0'-10"	0'-11"	1'-0"	1'-0"	1'-0"	1'-0"	1'-0"
B	1'-2"	1'-5"	1'-6"	1'-8"	1'-9"	1'-10"	1'-11"	1'-11"	1'-11"	2'-0"
C	1'-8"	1'-11"	2'-1"	2'-4"	2'-5"	2'-7"	2'-8"	2'-9"	3'-3"	3'-6"
D	1'-2"	1'-7"	1'-10"	2'-0"	2'-3"	2'-5"	2'-8"	2'-10"	3'-2"	3'-7"
F	0'-8"	0'-8"	0'-9"	0'-9"	0'-9"	0'-9"	0'-9"	0'-9"	0'-9"	0'-9"
H	2'-10"	3'-3"	3'-7"	3'-9"	4'-0"	4'-2"	4'-5"	4'-7"	4'-11"	5'-4"
L	5'-5"	7'-2"	8'-6"	9'-2"	10'-2"	10'-11"	12'-1"	12'-11"	13'-0"	13'-0"
S	1'-11"	2'-6"	2'-10"	3'-2"	3'-6"	3'-9"	4'-1"	4'-5"	5'-0"	5'-8"
CUBIC YARDS OF CONCRETE										
Conc. Pipe	0.502	0.855	1.236	1.500	1.811	2.101	2.512	2.801	2.969	2.904

NO SCALE

U.S. DEPARTMENT OF TRANSPORTATION
FEDERAL HIGHWAY ADMINISTRATION
OFFICE OF FEDERAL LANDS HIGHWAY

FLH STANDARD

CONCRETE HEADWALL FOR SMALL PIPE CULVERT

STANDARD APPROVED FOR USE 6/2005
REVISED:
DRAFT: 3/2016

STANDARD
601-4

10 February 2023 9:54 AM c:\pw-work\d0413405\Std601-4.dgn [Std 601-4]

PROJECT	SHEET NUMBER

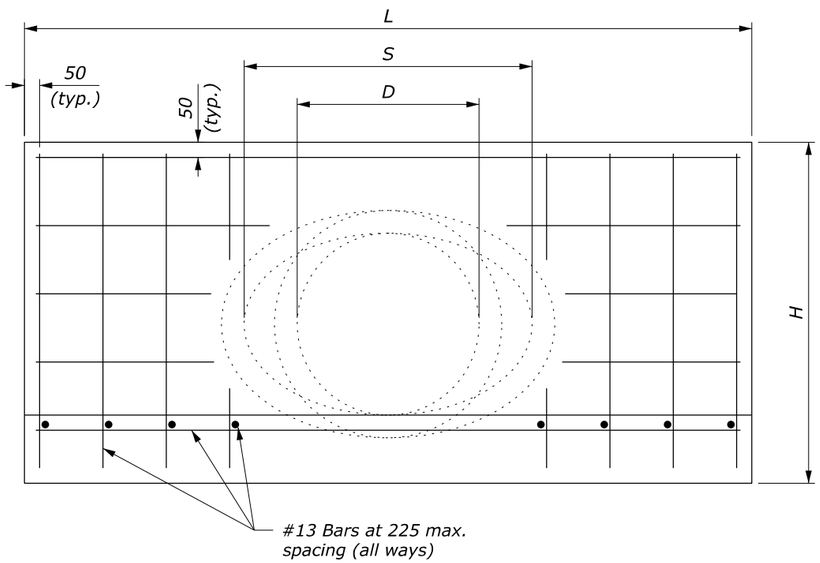

FRONT ELEVATION

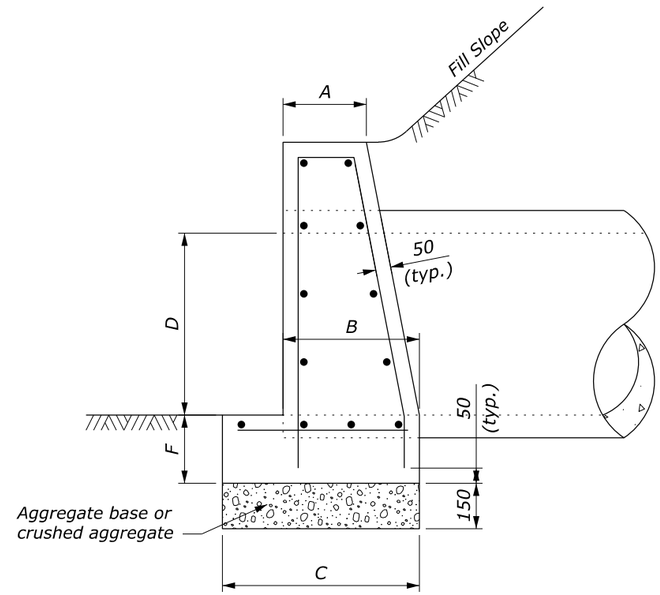

SIDE ELEVATION

NOTE:

1. Orient all headwalls parallel to the roadway centerline unless otherwise indicated in the plans or by the CO.
2. When pipes are on a skew, adapt and lengthen headwalls as directed.
3. Chamfer all exposed corners not rounded to 20 mm.
4. Quantities shown are for one headwall with pipe at right angles.
5. Construct headwalls using dimensions shown under values for 1V:1.5H slope, unless otherwise designated by the CO.
6. Dimensions without units are millimeters.

HEADWALL FOR CIRCULAR PIPE

	DIAMETER OF PIPE CULVERT					
	300	375	450	525 or 600	675 or 750	825 or 900
A	150	200	225	275	300	300
B	225	325	375	450	525	600
C	350	475	525	650	750	825
D	300	375	450	600	750	900
F	150	200	200	225	225	225
H	600	875	950	1125	1275	1425
L	1100	1500	1800	2400	3000	3600
	CUBIC METERS OF CONCRETE					
Conc. Pipe	0.127	0.359	0.516	0.974	1.528	2.185
C.M. Pipe	0.137	0.379	0.546	1.032	1.624	2.326

HEADWALL FOR ELLIPTICAL PIPE

	SIZE OF ELLIPTICAL PIPE CULVERT (SPAN x RISE)									
	575 x 350	750 x 475	850 x 550	950 x 600	1050 x 675	1125 x 725	1225 x 800	1325 x 850	1500 x 950	1700 x 1075
A	200	225	250	275	275	300	300	300	300	300
B	350	425	450	500	525	550	575	575	575	600
C	500	575	625	700	725	775	800	825	975	1050
D	350	475	550	600	675	725	800	850	950	1075
F	200	200	225	225	225	225	225	225	225	225
H	850	975	1075	1125	1200	1250	1325	1375	1475	1600
L	1625	2150	2550	2750	3050	3275	3625	3875	3900	3900
S	575	750	850	950	1050	1125	1225	1325	1500	1700
	CUBIC METERS OF CONCRETE									
Conc. Pipe	0.378	0.639	0.913	1.119	1.352	1.569	1.876	2.074	2.241	2.363

NO SCALE

U.S. DEPARTMENT OF TRANSPORTATION
FEDERAL HIGHWAY ADMINISTRATION
OFFICE OF FEDERAL LANDS HIGHWAY

METRIC FLH STANDARD

CONCRETE HEADWALL FOR SMALL PIPE CULVERT

STANDARD APPROVED FOR USE 3/1996
REVISED: 5/1997 6/2005
DRAFT: 3/2016

STANDARD
M601-4

c:\pw-work\d0147408\Std601-4.dgn [Std M601-4]
22 February 2023 11:19 AM

PROJECT	SHEET NUMBER

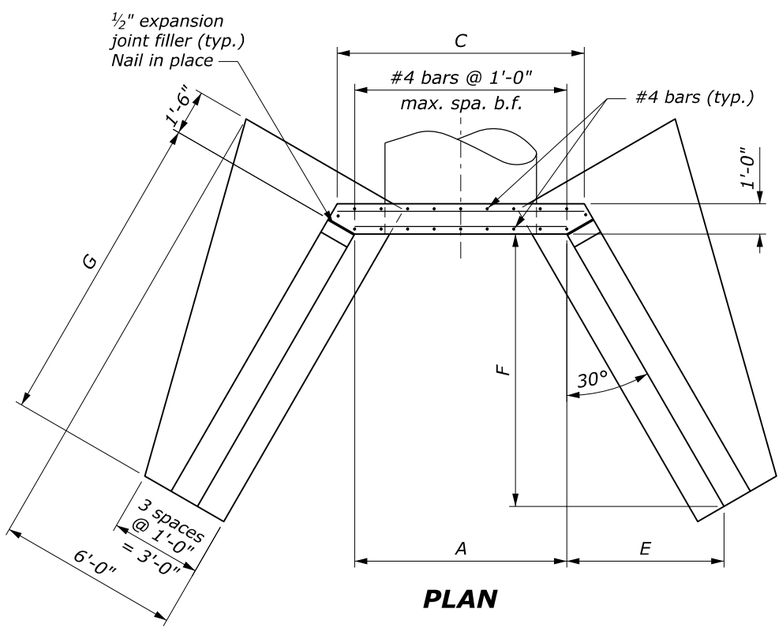

PLAN

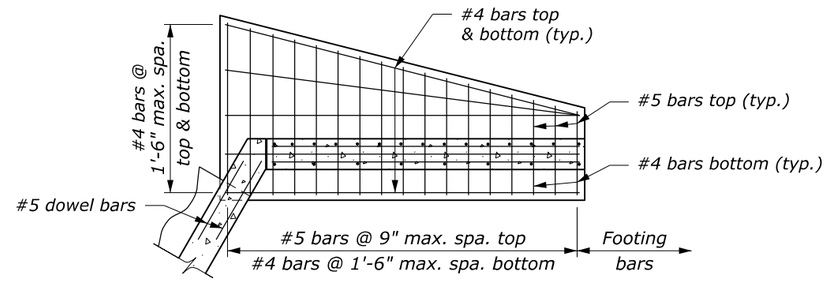

WINGWALL PLAN

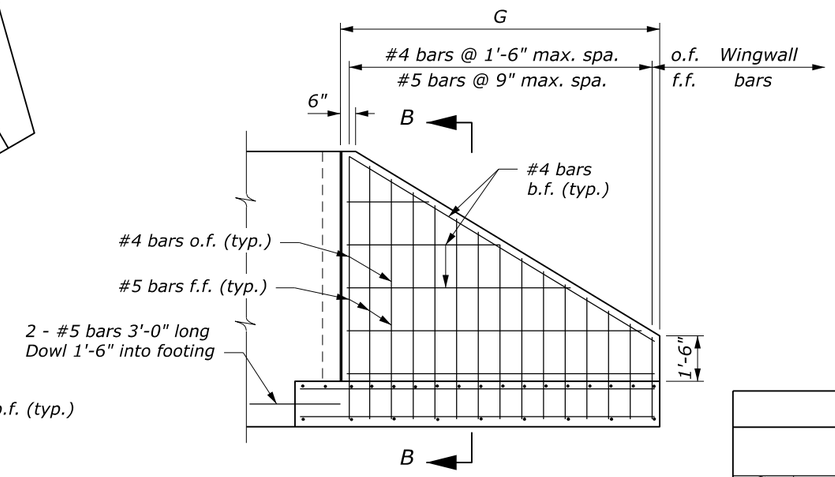

WINGWALL ELEVATION

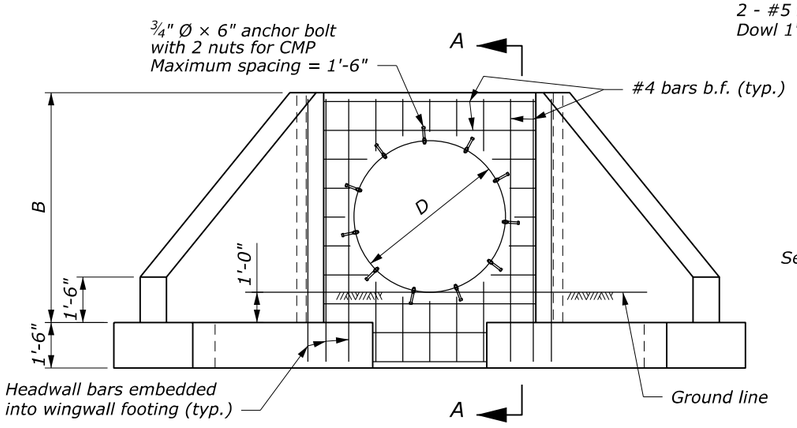

FRONT ELEVATION

(Showing headwall reinforcement)

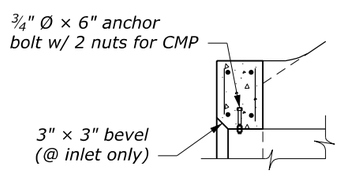

DETAIL C

(For Metal Pipes)

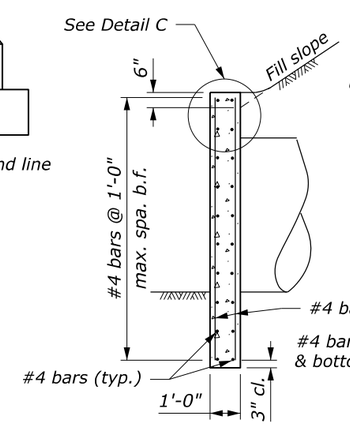

SECTION A-A

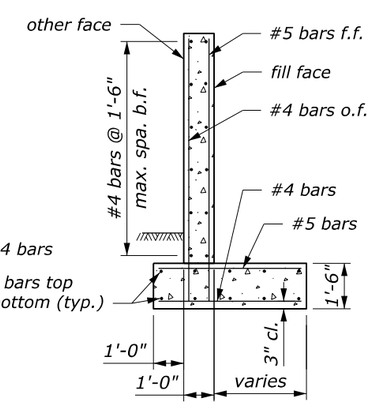

SECTION B-B

NOTE:

1. This detail applies for normal crossings and skews up to 15°.
2. On shallow fill where headwall is 2-feet or less below shoulder line, construct the headwall parallel to line and grade of the shoulder.
3. Do not allow top of wingwall to project above fill slope, ditch slope or shoulder.
4. Concrete shall conform to Section 601. Chamfer all exposed edges ¾" and finish all exposed surfaces with a Class 1 ordinary surface finish. Joint filler shall conform to AASHTO M213 and shall be subsidary to concrete quantity.
5. Bell end of concrete pipe may replace bevel at inlet headwall.
6. Quantities shown in table are for one headwall and two wingwalls and are based on CMP. Concrete and steel quantities shown will be used as basis for final payment for headwall/ wingwalls constructed according to this standard.
7. Reinforcing steel clearance is 2 inches unless shown otherwise.
8. Anchor bolts shall conform to ASTM A307. Galvanize bolts and nuts to conform to ASTM A153. Anchor bolts shall be subsidary to reinforcing steel quantity.

DIMENSIONS AND QUANTITIES

		D (Diameter of pipe culvert)							
		42"	48"	54"	60"	66"	72"	78"	84"
1V:1.5H fill slope	A	5'-6"	6'-0"	6'-6"	7'-0"	7'-6"	8'-0"	8'-6"	9'-0"
	B	5'-11½"	6'-5½"	6'-11½"	7'-5½"	7'-11½"	8'-5½"	8'-11½"	9'-5½"
	C	6'-7¾"	7'-1¾"	7'-7¾"	8'-1¾"	8'-7¾"	9'-1¾"	9'-7¾"	10'-1¾"
	E	3'-10½"	4'-3¾"	4'-9"	5'-2¼"	5'-7¼"	6'-0¾"	6'-5¾"	6'-11"
	F	6'8¾"	7'-5¾"	8'-2½"	8'-11¾"	9'-8½"	10'-5¾"	11'-2¾"	12'-0"
	G	7'-9"	8'-7½"	9'-6"	10'-4½"	11'-2¾"	12'-1¼"	12'-11½"	13'-10¼"
Conc. (CUYD)		8.0	9.0	10.1	11.1	12.2	13.4	14.5	15.8
Steel (LB)		651	738	818	878	977	1040	1152	1249
1V:2H fill slope	A	5'-6"	6'-0"	6'-6"	7'-0"	7'-6"	8'-0"	8'-6"	9'-0"
	B	5'-11½"	6'-5½"	6'-11½"	7'-5½"	7'-11½"	8'-5½"	8'-11½"	9'-5½"
	C	6'-7¾"	7'-1¾"	7'-7¾"	8'-1¾"	8'-7¾"	9'-1¾"	9'-7¾"	10'-1¾"
	E	5'-2"	5'-9"	6'-3¾"	6'-11"	7'-5¾"	8'-0¾"	8'-7¾"	9'-2¾"
	F	8'-11½"	9'-11¾"	10'-11½"	11'-11¾"	12'-11½"	13'-11¾"	14'-11½"	15'-11¾"
	G	10'-4"	11'-6¼"	12'-7¾"	13'-10"	14'-11½"	16'-1¾"	17'-3¼"	18'-5½"
Conc. (CUYD)		10.0	11.3	12.6	14.0	15.4	16.9	18.3	19.9
Steel (LB)		798	911	1001	1104	1206	1315	1417	1554

Abbreviations:
f.f. = Fill face
o.f. = Other face
b.f. = Both faces

NO SCALE

U.S. DEPARTMENT OF TRANSPORTATION
FEDERAL HIGHWAY ADMINISTRATION
OFFICE OF FEDERAL LANDS HIGHWAY

FLH STANDARD

CONCRETE HEADWALL/WINGWALL FOR SINGLE NORMAL 42" TO 84" PIPE CULVERT

STANDARD APPROVED FOR USE 6/2005
REVISED:

STANDARD
601-5

20 September 2022 11:21 AM C:\Users\Stephen.Chapman\OneDrive - DOT OST\CADD\cells\FLH-Cells.cel [Base.B.US]

PROJECT	SHEET NUMBER

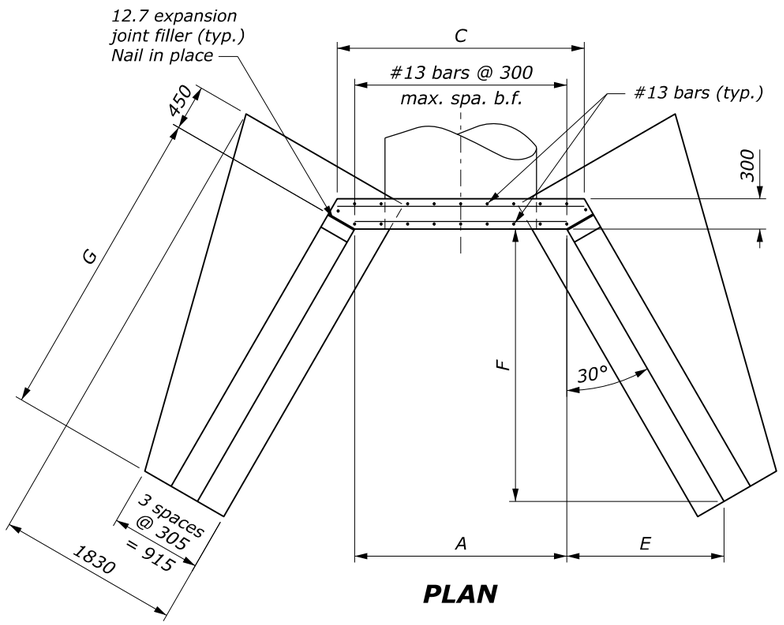

PLAN

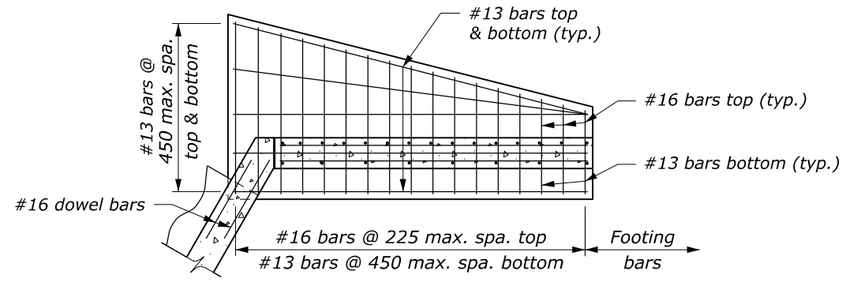

WINGWALL PLAN

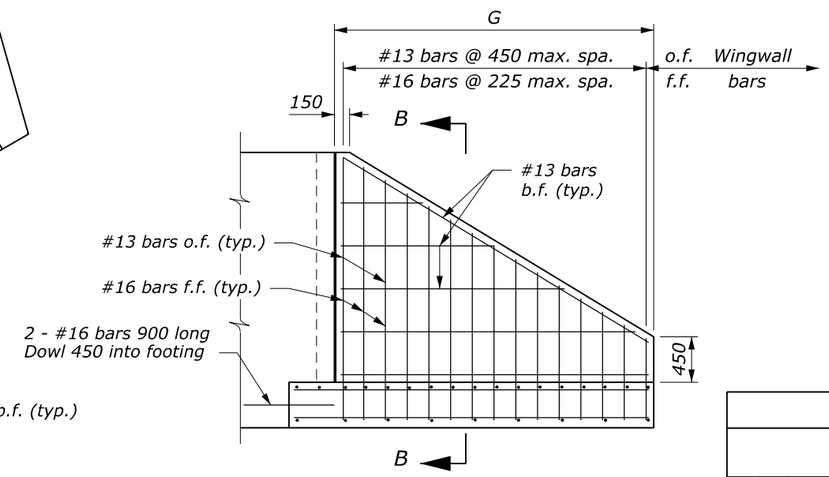

WINGWALL ELEVATION

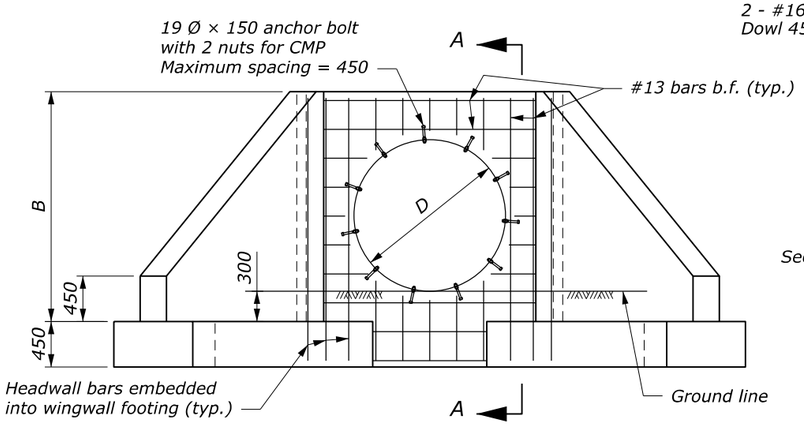

FRONT ELEVATION

(Showing headwall reinforcement)

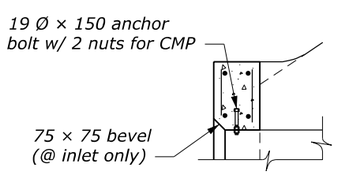

DETAIL C

(For Metal Pipes)

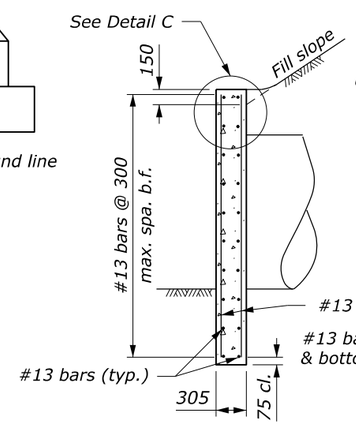

SECTION A-A

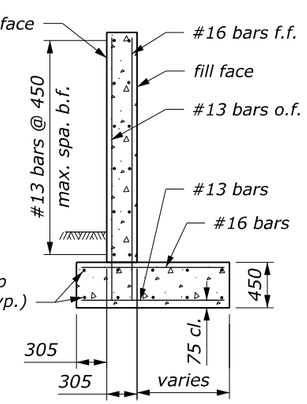

SECTION B-B

NOTE:

1. This detail applies for normal crossings and skews up to 15°.
2. On shallow fill where headwall is 600 mm or less below shoulder line, construct the headwall parallel to line and grade of the shoulder.
3. Do not allow top of wingwall to project above fill slope, ditch slope or shoulder.
4. Concrete shall conform to Section 601. Chamfer all exposed edges 20 mm and finish all exposed surfaces with a Class 1 ordinary surface finish. Joint filler shall conform to AASHTO M213 and shall be subsidary to concrete quantity.
5. Bell end of concrete pipe may replace bevel at inlet headwall.
6. Quantities shown in table are for one headwall and two wingwalls and are based on CMP. Concrete and steel quantities shown will be used as basis for final payment for headwall/ wingwalls constructed according to this standard.
7. Reinforcing steel clearance is 50 mm unless shown otherwise.
8. Anchor bolts shall conform to ASTM A307. Galvanize bolts and nuts to conform to ASTM A153. Anchor bolts shall be subsidary to reinforcing steel quantity.
9. Dimensions without units are millimeters.

DIMENSIONS AND QUANTITIES

		D (Diameter of pipe culvert)							
		1050	1200	1350	1500	1650	1800	1950	2100
1V:1.5H fill slope	A	1675	1830	1980	2135	2285	2440	2590	2745
	B	1815	1970	2120	2275	2425	2580	2730	2885
	C	2025	2180	2330	2485	2635	2790	2940	3095
	E	1180	1315	1450	1580	1710	1845	1975	2110
	F	2050	2280	2505	2735	2960	3195	3420	3655
	G	2365	2630	2895	3160	3420	3690	3950	4220
Conc. (m³)		6.1	6.9	7.7	8.5	9.4	10.2	11.1	12.1
Steel (kg)		295	334	371	398	443	471	522	567
1V:2H fill slope	A	1675	1830	1980	2135	2285	2440	2590	2745
	B	1815	1970	2120	2275	2425	2580	2730	2885
	C	2025	2180	2330	2485	2635	2790	2940	3095
	E	1575	1755	1925	2110	2280	2460	2635	2815
	F	2730	3040	3340	3650	3950	4260	4560	4870
	G	3150	3510	3855	4215	4560	4920	5265	5625
Conc. (m³)		7.7	8.6	9.6	10.7	11.8	12.9	14.0	15.2
Steel (kg)		362	413	454	501	547	596	642	705

Abbreviations:
f.f. = Fill face
o.f. = Other face
b.f. = Both faces

NO SCALE

U.S. DEPARTMENT OF TRANSPORTATION
FEDERAL HIGHWAY ADMINISTRATION
OFFICE OF FEDERAL LANDS HIGHWAY

METRIC FLH STANDARD

CONCRETE HEADWALL/WINGWALL FOR SINGLE NORMAL 1050 TO 2100 PIPE CULVERT

STANDARD APPROVED FOR USE 3/1996
REVISED: 5/1997 6/2005

STANDARD M601-5

22 February 2023 11:20 AM c:\pw-work\d0147408\Std601-5.dgn [Std M601-5]

PROJECT	SHEET NUMBER

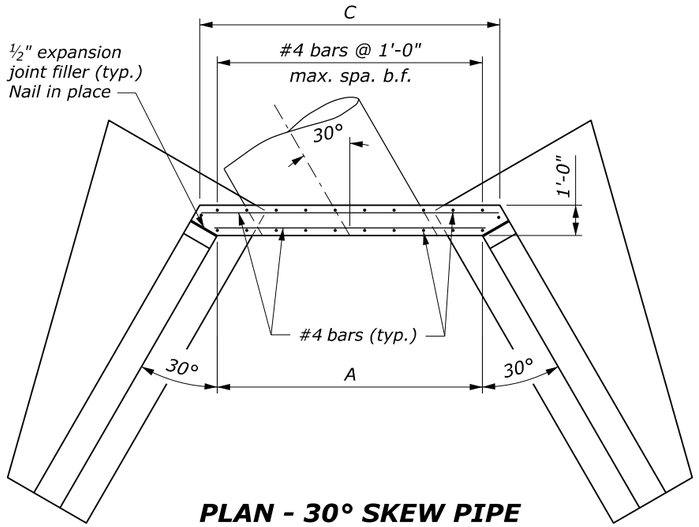

PLAN - 30° SKEW PIPE

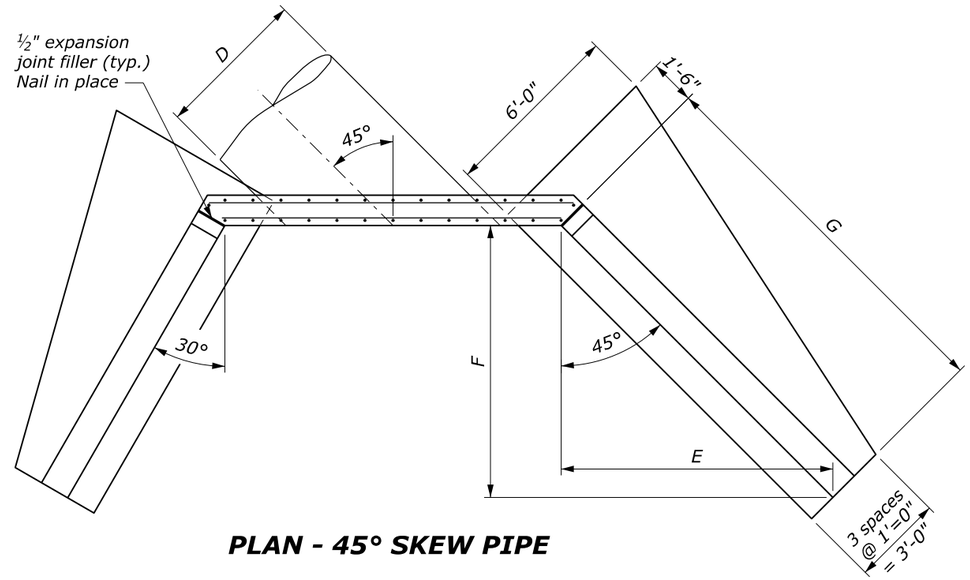

PLAN - 45° SKEW PIPE

NOTE:

1. Use the 30° Skew Detail for skews greater than 15° to 37°30'. Use the 45° Skew Detail for skews greater than 37°30' to 45°.
2. Quantities shown in table are for one headwall and two wingwalls and are based on CMP. Concrete and steel quantities shown will be used as basis for final payment for headwall/wingwalls constructed according to this standard.
3. For dimensions and reinforcing details not shown, and additional notes see Standard 601-5.

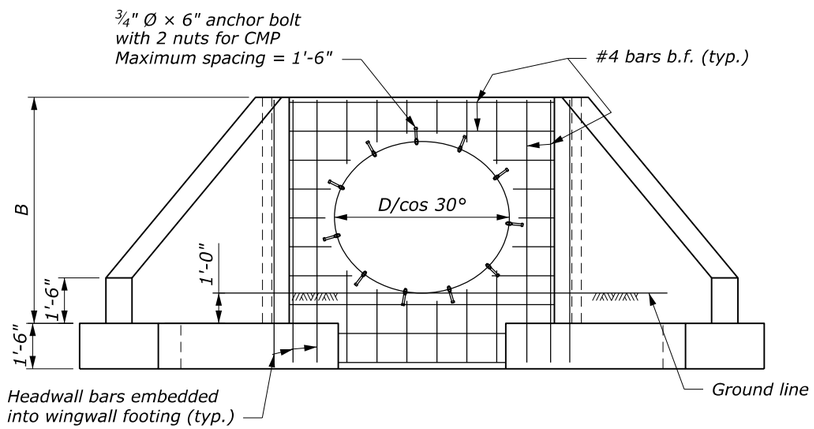

FRONT ELEVATION - 30° SKEW PIPE
(Showing headwall reinforcement)

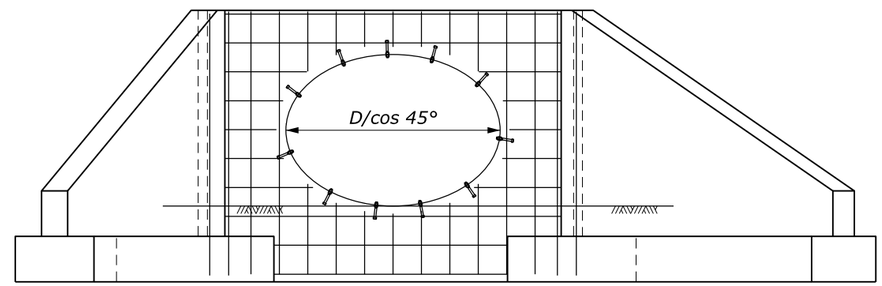

FRONT ELEVATION - 45° SKEW PIPE
(Showing headwall reinforcement)

DIMENSIONS AND QUANTITIES FOR 30° SKEW PIPE

		D (Diameter of pipe culvert)							
		42"	48"	54"	60"	66"	72"	78"	84"
	A	7'-0¼"	7'-7¼"	8'-2"	8'-9"	9'-4"	9'-11"	10'-5¾"	11'-0¾"
	C	8'-2"	8'-9"	9'-4"	9'-11"	10'-5¾"	11'-0¾"	11'-7¾"	12'-2-¾"
1V:1.5H fill slope	Conc. (CUYD)	8.4	9.4	10.5	11.6	12.7	13.9	15.1	16.4
	Steel (LB)	682	764	853	908	1016	1080	1196	1294
1V:2H fill slope	Conc. (CUYD)	10.4	11.7	13.0	14.5	15.9	17.4	18.9	20.5
	Steel (LB)	829	938	1036	1135	1245	1355	1461	1598

DIMENSIONS AND QUANTITIES FOR 45° SKEW PIPE

		D (Diameter of pipe culvert)							
		42"	48"	54"	60"	66"	72"	78"	84"
	A	8'-11¼"	9'-8"	10'-4¼"	11'-0¾"	11'-9¼"	12'-6"	13'-2¼"	13'-11"
	C	9'-11¼"	10'-8"	11'-4¼"	12'-1"	12'-9¼"	13'-6"	14'-2¼"	14'-11"
1V:1.5H fill slope	E	6'-8¾"	7'-5¾"	8'-2½"	8'-11¾"	9'-8½"	10'-5¾"	11'-2¾"	12'-0"
	F	6'-8¾"	7'-5¾"	8'-2½"	8'-11¾"	9'-8½"	10'-5¾"	11'-2¾"	12'-0"
	G	9'-6"	10'-7"	11'-7½"	12'-8¼"	13'-9"	14'-10"	15'-10¼"	16'-11¼"
	Conc. (CUYD)	9.5	10.6	11.8	13.1	14.4	15.7	17.1	18.5
	Steel (LB)	787	868	977	1051	1177	1249	1370	1490
1V:2H fill slope	E	8'-11½"	9'-11¾"	10'-11½"	11'-11¾"	12'-11½"	13'-11¾"	14'-11½"	15'-11¾"
	F	8'-11½"	9'-11¾"	10'-11½"	11'-11¾"	12'-11½"	13'-11¾"	14'-11½"	15'-11¾"
	G	12'-8"	14'-1¼"	15'-6"	16'-11¼"	18'-4"	19'-9¼"	21'-2"	22'-7"
	Conc. (CUYD)	11.7	13.2	14.7	16.3	17.9	19.6	21.3	23.1
	Steel (LB)	951	1070	1190	1303	1440	1559	1695	1846

NO SCALE

U.S. DEPARTMENT OF TRANSPORTATION
FEDERAL HIGHWAY ADMINISTRATION
OFFICE OF FEDERAL LANDS HIGHWAY

FLH STANDARD

CONCRETE HEADWALL/WINGWALL FOR SINGLE SKEW 42" TO 84" PIPE CULVERT

STANDARD APPROVED FOR USE 6/2005
REVISED:

STANDARD 601-6

20 September 2022 11:21 AM C:\Users\Stephen.Chapman\OneDrive - DOT OST\CADD\cells\FLH-Cells.cdl [Base.B.US]

PROJECT	SHEET NUMBER

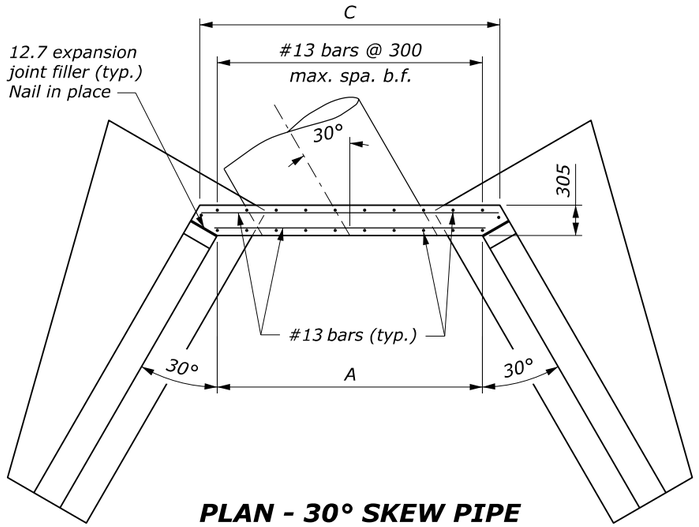

PLAN - 30° SKEW PIPE

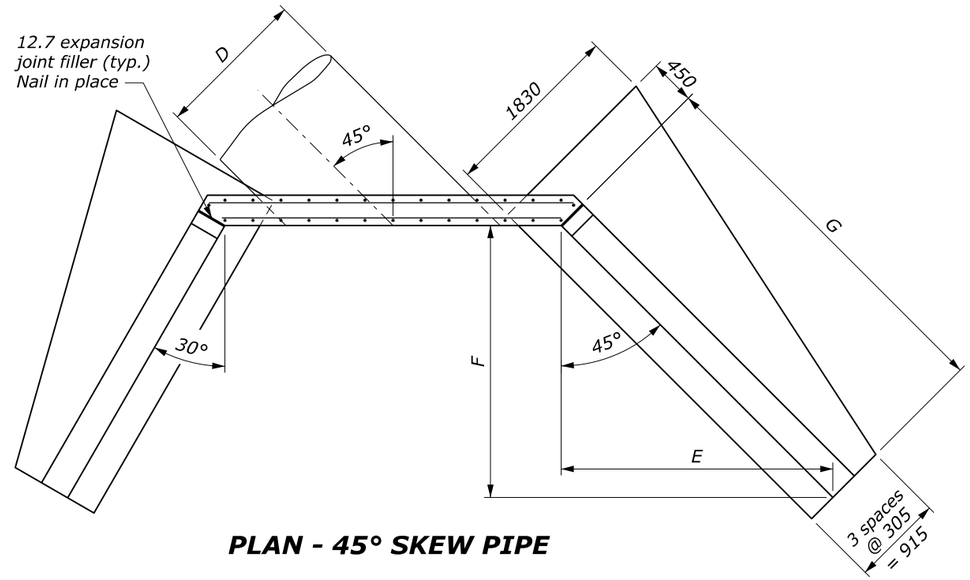

PLAN - 45° SKEW PIPE

NOTE:

1. Use the 30° Skew Detail for skews greater than 15° to 37°30'. Use the 45° Skew Detail for skews greater than 37°30' to 45°.
2. Quantities shown in table are for one headwall and two wingwalls and are based on CMP. Concrete and steel quantities shown will be used as basis for final payment for headwall/wingwalls constructed according to this standard.
3. For dimensions and reinforcing details not shown, and additional notes see Standard M601-5.
4. Dimensions without units are millimeters.

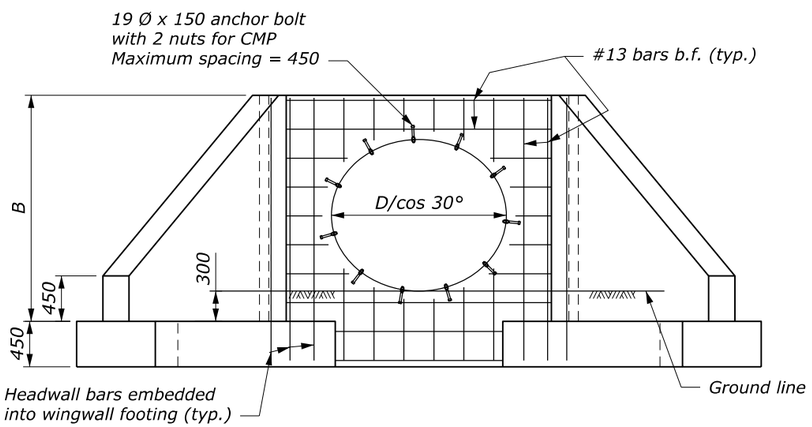

FRONT ELEVATION - 30° SKEW PIPE
(Showing headwall reinforcement)

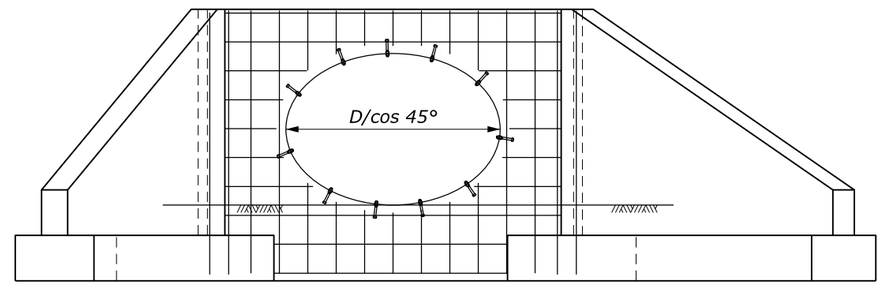

FRONT ELEVATION - 45° SKEW PIPE
(Showing headwall reinforcement)

DIMENSIONS AND QUANTITIES FOR 30° SKEW PIPE

		D (Diameter of pipe culvert)							
		1050	1200	1350	1500	1650	1800	1950	2100
	A	2140	2320	2490	2670	2845	3025	3195	3375
	C	2490	2670	2845	3025	3195	3375	3550	3725
1V:1.5H fill slope	Conc. (m³)	6.4	7.2	8.0	8.9	9.7	10.7	11.6	12.5
	Steel (kg)	309	346	387	412	461	490	542	587
1V:2H fill slope	Conc. (m³)	7.9	9.0	10.0	11.1	12.1	13.3	14.5	15.7
	Steel (kg)	376	425	470	515	565	614	662	725

DIMENSIONS AND QUANTITIES FOR 45° SKEW PIPE

		D (Diameter of pipe culvert)							
		1050	1200	1350	1500	1650	1800	1950	2100
	A	2725	2945	3155	3375	3590	3810	4020	4240
	C	3030	3250	3460	3680	3895	4115	4325	4545
1V:1.5H fill slope	E	2050	2280	2505	2735	2960	3195	3420	3655
	F	2050	2280	2505	2735	2960	3195	3420	3655
	G	2895	3225	3545	3870	4190	4520	4835	5165
	Conc. (m³)	7.2	8.1	9.1	10.0	11.0	12.0	13.1	14.2
	Steel (kg)	357	394	443	477	534	566	621	676
1V:2H fill slope	E	2730	3040	3340	3650	3950	4260	4560	4870
	F	2730	3040	3340	3650	3950	4260	4560	4870
	G	3860	4300	4725	5160	5585	6025	6450	6885
	Conc. (m3)	8.9	10.1	11.2	12.4	13.7	15.0	16.3	17.7
	Steel (kg)	431	485	539	591	653	707	768	837

NO SCALE

U.S. DEPARTMENT OF TRANSPORTATION
FEDERAL HIGHWAY ADMINISTRATION
OFFICE OF FEDERAL LANDS HIGHWAY

METRIC FLH STANDARD

CONCRETE HEADWALL/WINGWALL FOR SINGLE SKEW 1050 TO 2100 PIPE CULVERT

STANDARD APPROVED FOR USE 3/1996
REVISED: 5/1997 6/2005

STANDARD M601-6

22 February 2023 11:20 AM c:\pw-work\d0147408\Std601-6.dgn [Std M601-6]

PROJECT	SHEET NUMBER

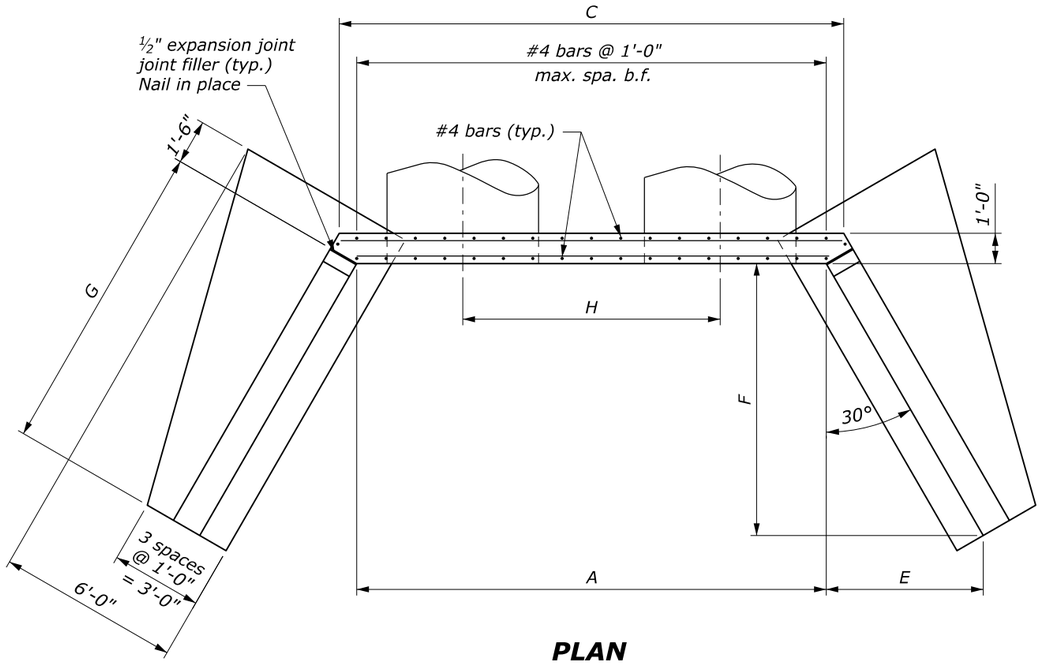

PLAN

NOTE:

1. This detail applies for normal crossings and skews up to 15°.
2. Quantities shown in table are for one headwall and two wingwalls and are based on CMP. Concrete and steel quantities shown will be used as basis for final payment for headwall/wingwalls constructed according to this standard.
3. For dimensions and reinforcing details not show, and additional notes see Standard 601-5.

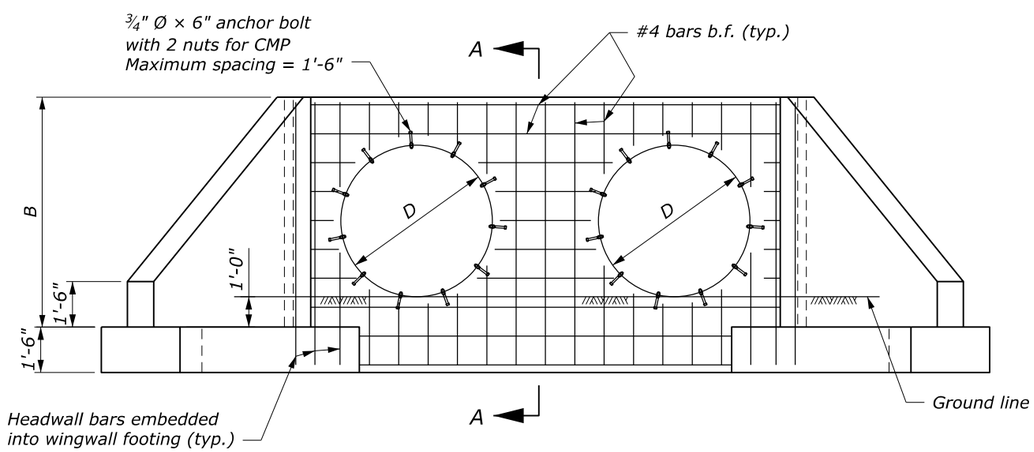

FRONT ELEVATION
(Showing headwall reinforcement)

DIMENSIONS AND QUANTITIES

		D (Diameter of pipe culvert)							
		42"	48"	54"	60"	66"	72"	78"	84"
	A	11'-6"	12'-10¼"	14'-2"	15'-6"	16'-10"	18'-2"	19'-5¾"	20'-10"
	C	12'-7¾"	14'-0"	15'-3¾"	16'-7¾"	17'-11¾"	19'-4"	20'-7¾"	21'-11¾"
	H	6'-0"	6'-10"	7'-8"	8'-6"	9'-4"	10'-2"	11'-0"	11'-10"
1V:1.5H fill slope	Conc. (CUYD)	9.3	10.6	11.9	13.2	14.6	16.1	17.6	19.2
	Steel (LB)	752	850	961	1020	1166	1228	1380	1488
1V:2H fill slope	Conc. (CUYD)	11.3	12.9	14.4	16.1	17.8	19.6	21.4	23.3
	Steel (LB)	900	1023	1144	1247	1395	1503	1644	1793
Add. Conc. per pipe (CUYD)		1.3	1.6	1.8	2.1	2.4	2.7	3.0	3.4
Add. Steel per pipe (LB)		120	122	154	165	202	213	254	267

NO SCALE

U.S. DEPARTMENT OF TRANSPORTATION
FEDERAL HIGHWAY ADMINISTRATION
OFFICE OF FEDERAL LANDS HIGHWAY

FLH STANDARD

CONCRETE HEADWALL/WINGWALL FOR MULTIPLE NORMAL 42" TO 84" PIPE CULVERT

STANDARD APPROVED FOR USE 6/2005
REVISED:

STANDARD
601-7

20 September 2022 11:21 AM C:\Users\Stephen.Chapman\OneDrive - DOT OST\CADD\cells\FLH-Cells.cel [Base.B.US]

PROJECT	SHEET NUMBER

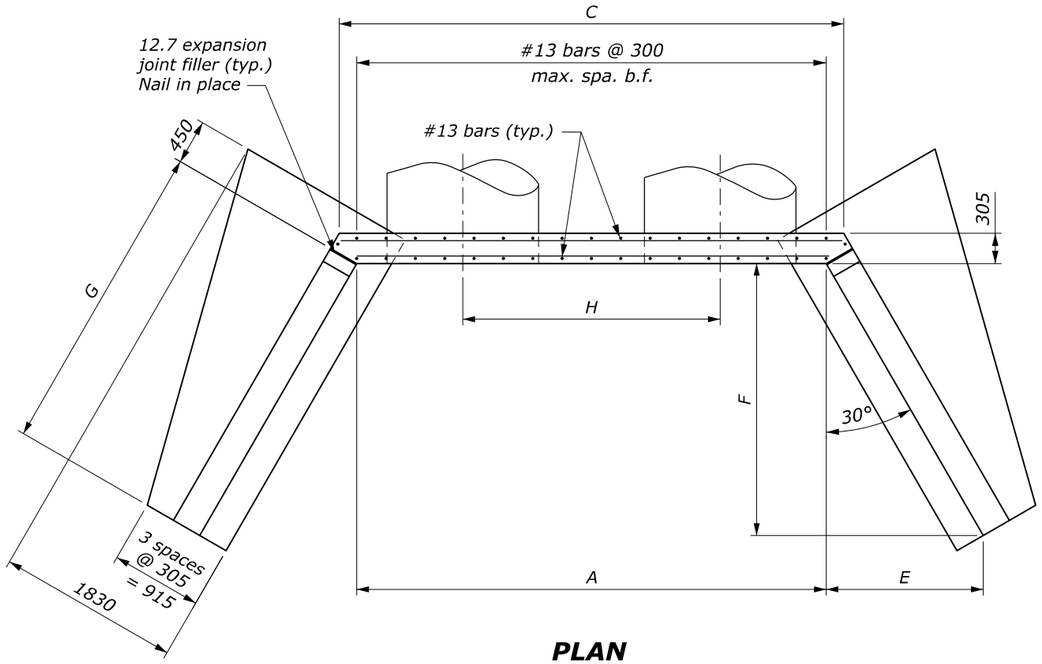

PLAN

NOTE:

1. This detail applies for normal crossings and skews up to 15°.
2. Quantities shown in table are for one headwall and two wingwalls and are based on CMP. Concrete and steel quantities shown will be used as basis for final payment for headwall/wingwalls constructed according to this standard.
3. For dimensions and reinforcing details not show, and additional notes see Standard M601-5.
4. Dimensions without units are millimeter.

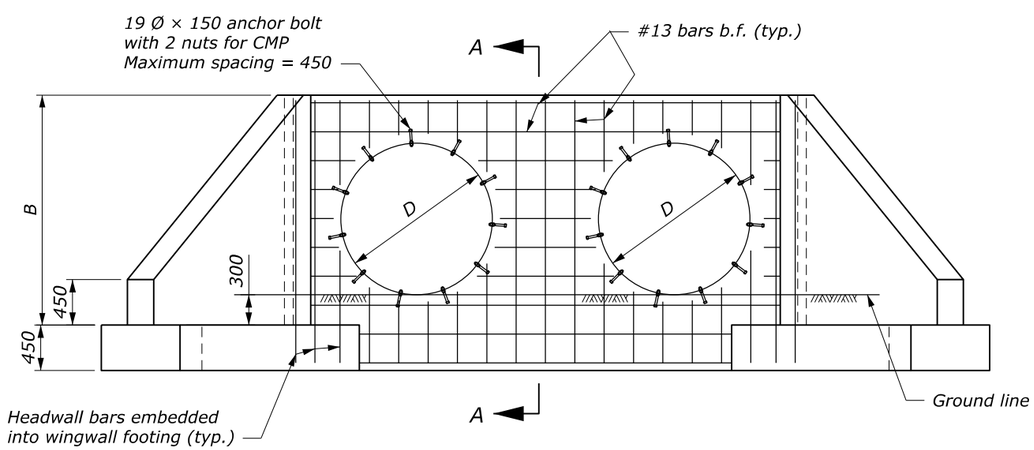

FRONT ELEVATION
(Showing headwall reinforcement)

DIMENSIONS AND QUANTITIES

		D (Diameter of pipe culvert)							
		1050	1200	1350	1500	1650	1800	1950	2100
	A	3505	3915	4315	4725	5130	5540	5940	6350
	C	3855	4265	4665	5075	5480	5890	6290	6700
	H	1830	2085	2335	2590	2845	3100	3350	3605
1V:1.5H fill slope	Conc. (m³)	7.1	8.1	9.1	10.1	11.2	12.3	13.4	14.6
	Steel (kg)	341	385	436	462	529	557	625	675
1V:2H fill slope	Conc. (m³)	8.6	9.8	11.0	12.3	13.6	15.0	16.3	17.8
	Steel (kg)	408	464	518	565	633	681	746	813
Add. Conc. per pipe (m³)		1.0	1.2	1.4	1.6	1.8	2.1	2.3	2.6
Add. Steel per pipe (kg)		55	55	70	75	91	97	115	121

NO SCALE

U.S. DEPARTMENT OF TRANSPORTATION
FEDERAL HIGHWAY ADMINISTRATION
OFFICE OF FEDERAL LANDS HIGHWAY

METRIC FLH STANDARD

CONCRETE HEADWALL/WINGWALL FOR MULTIPLE NORMAL 1050 TO 2100 PIPE CULVERT

STANDARD APPROVED FOR USE 3/1996
REVISED: 5/1997 6/2005

STANDARD
M601-7

c:\pw-work\d0147408\Std601-7.dgn [Std M601-7]
22 February 2023 9:35 AM

PROJECT	SHEET NUMBER

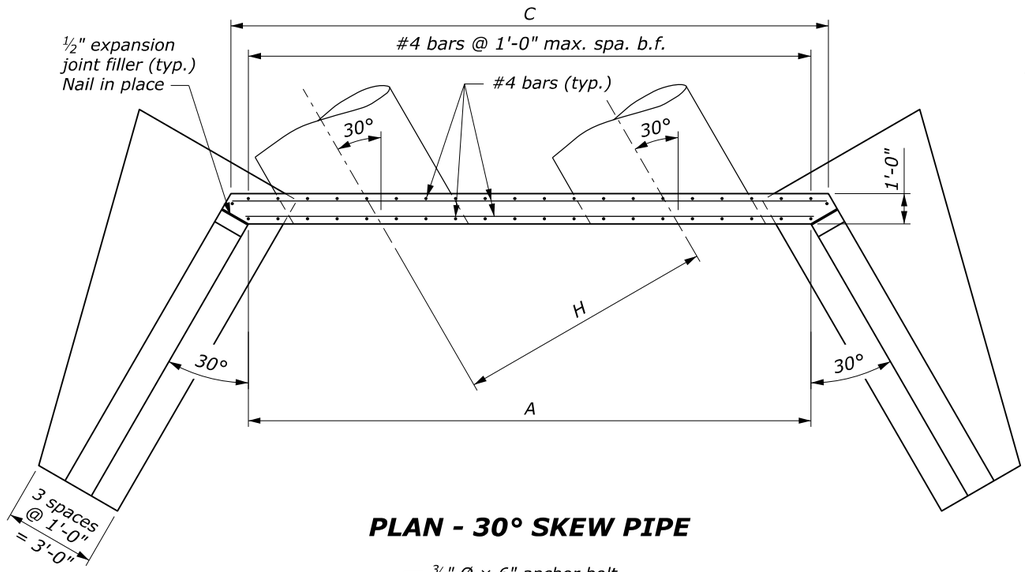

PLAN - 30° SKEW PIPE

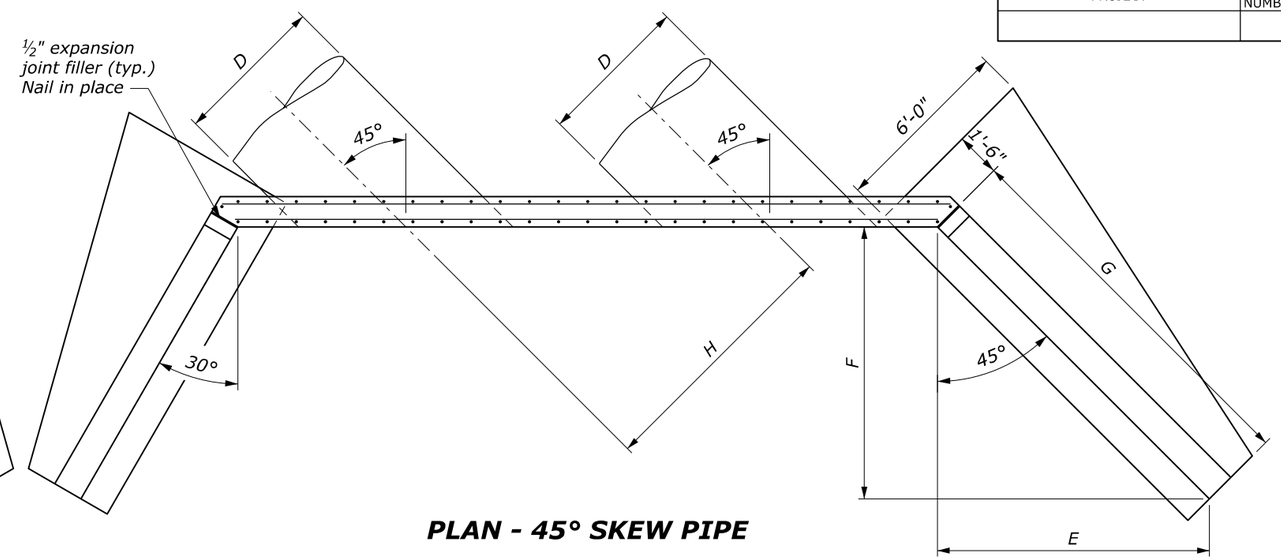

PLAN - 45° SKEW PIPE

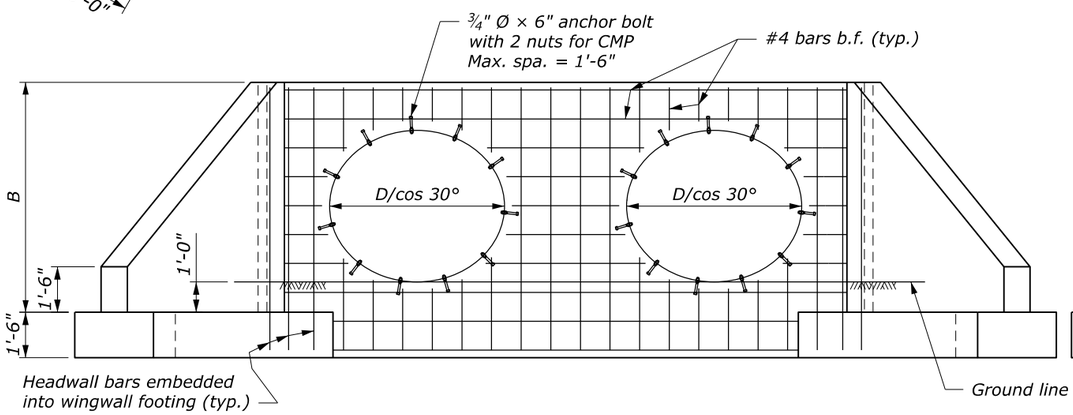

FRONT ELEVATION - 30° SKEW PIPE
(Showing headwall reinforcement)

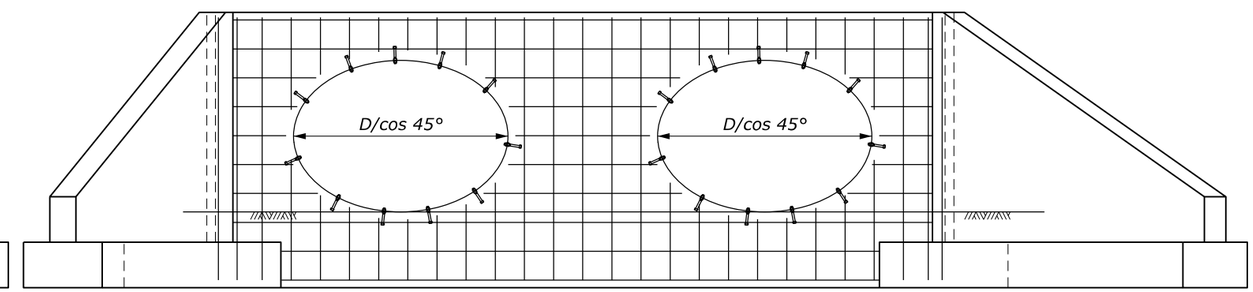

FRONT ELEVATION - 45° SKEW PIPE
(Showing headwall reinforcement)

NOTE:

1. Use the 30° Skew Detail for skews greater than 15° to 37°30'. Use the 45° Skew Detail for skews greater than 37°30' to 45°.
2. Quantities shown in table are for one headwall and two wingwalls and are based on CMP. Concrete and steel quantities shown will be used as basis for final payment for headwall/wingwalls constructed according to this standard.
3. For dimensions and reinforcing details not shown, and additional notes see Standards 601-5 and 6.

DIMENSIONS AND QUANTITIES FOR 30° SKEW PIPE

		D (Diameter of pipe culvert)							
		42"	48"	54"	60"	66"	72"	78"	84"
	A	13'-11½"	15'-6"	17'-0¼"	18'-6¾"	20'-1¼"	21'-8"	23'-2¼"	24'-8¾"
	C	15'-1¼"	16'-7¾"	18'-2"	19'-8½"	21'-3"	22'-9¾"	24'-4"	25'-10¾"
	H	6'-0"	6'-10"	7'-8"	8'-6"	9'-4"	10'-2"	11'-0"	11'-10"
1V:1.5H fill slope	Conc. (CUYD)	9.9	11.2	12.6	14.0	15.5	17.1	18.6	20.3
	Steel (LB)	797	896	1014	1086	1227	1303	1463	1573
1V:2H fill slope	Conc. (CUYD)	11.9	13.5	15.1	16.9	18.6	20.5	22.4	24.4
	Steel (LB)	945	1070	1196	1313	1456	1578	1728	1877
Add. Conc. per pipe (CUYD)		1.5	1.8	2.1	2.4	2.8	3.1	3.5	3.9
Add. Steel per pipe (LB)		135	152	171	190	223	236	280	293

DIMENSIONS AND QUANTITIES FOR 45° SKEW PIPE

		D (Diameter of pipe culvert)							
		42"	48"	54"	60"	66"	72"	78"	84"
	A	17'-5¼"	19'-4"	21'-2¼"	23'-1¼"	24'-11½"	26'-10½"	28'-9"	30'-7¾"
	C	18'-5¼"	20'-4"	22'-2¼"	24'-1¼"	25'-11½"	27'-10½"	29'-9"	31'-7¾"
	H	6'-0"	6'-10"	7'-8"	8'-6"	9'-4"	10'-2"	11'-0"	11'-10"
1V:1.5H fill slope	Conc. (CUYD)	11.3	12.8	14.4	16.1	17.7	19.5	21.3	23.3
	Steel (LB)	926	1037	1180	1269	1453	1541	1708	1843
1V:2H fill slope	Conc. (CUYD)	13.5	15.4	17.2	19.2	21.2	23.4	25.6	27.9
	Steel (LB)	1091	1239	1393	1521	1716	1852	2032	2199
Add. Conc. per pipe (CUYD)		1.8	2.2	2.6	3.0	3.4	3.8	4.3	4.8
Add. Steel per pipe (LB)		158	178	224	241	288	305	350	367

NO SCALE

U.S. DEPARTMENT OF TRANSPORTATION
FEDERAL HIGHWAY ADMINISTRATION
OFFICE OF FEDERAL LANDS HIGHWAY

FLH STANDARD

CONCRETE HEADWALL/WINGWALL FOR MULTIPLE SKEW 42" TO 84" PIPE CULVERT

STANDARD APPROVED FOR USE 6/2005
REVISED:

STANDARD 601-8

c:\pw-work\d0413405\Std601-8.dgn [Std 601-8]
22 February 2023 9:36 AM

PROJECT	SHEET NUMBER

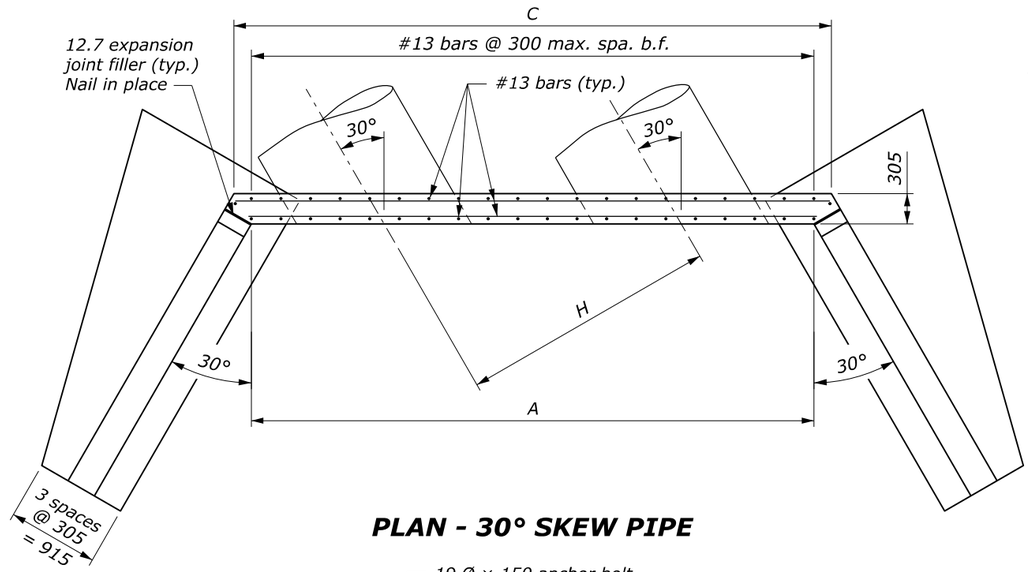

PLAN - 30° SKEW PIPE

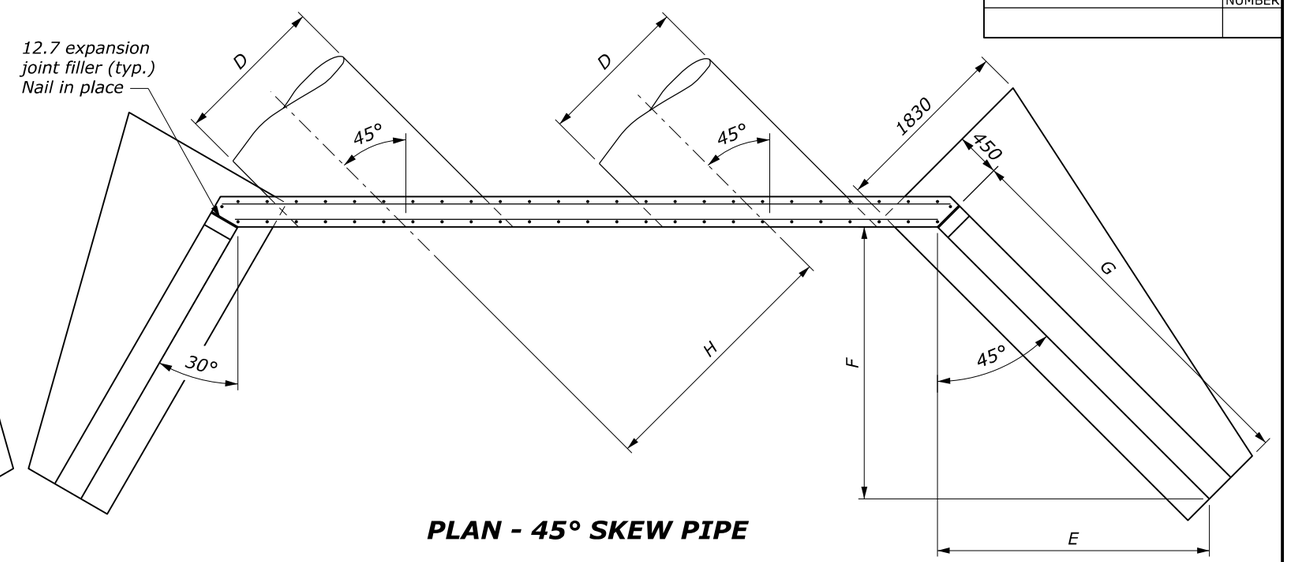

PLAN - 45° SKEW PIPE

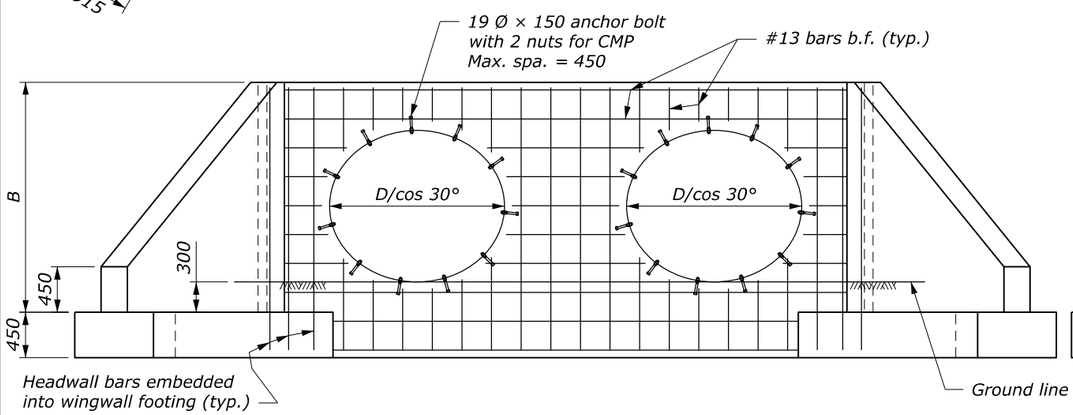

FRONT ELEVATION - 30° SKEW PIPE
(Showing headwall reinforcement)

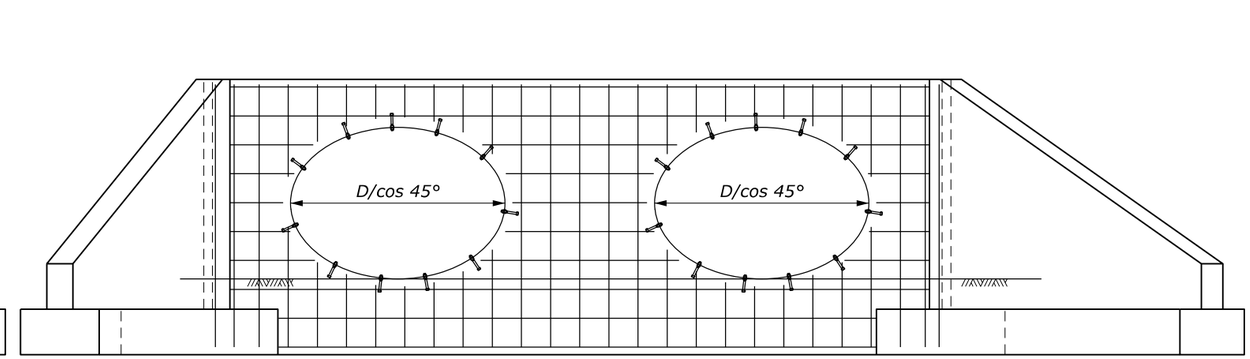

FRONT ELEVATION - 45° SKEW PIPE
(Showing headwall reinforcement)

NOTE:

1. Use the 30° Skew Detail for skews greater than 15° to 37°30'. Use the 45° Skew Detail for skews greater than 37°30' to 45°.
2. Quantities shown in table are for one headwall and two wingwalls and are based on CMP. Concrete and steel quantities shown will be used as basis for final payment for headwall/wingwalls constructed according to this standard.
3. For dimensions and reinforcing details not shown, and additional notes see Standards M601-5 and 6.
4. Dimensions without units are millimeters.

DIMENSIONS AND QUANTITIES FOR 30° SKEW PIPE

		D (Diameter of pipe culvert)							
		1050	1200	1350	1500	1650	1800	1950	2100
	A	4255	4725	5190	5660	6130	6605	7065	7540
	C	4605	5075	5540	6010	6480	6955	7415	7890
	H	1830	2085	2335	2590	2845	3100	3350	3605
1V:1.5H fill slope	Conc. (m³)	7.6	8.6	9.6	10.7	11.8	13.0	14.2	15.5
	Steel (kg)	362	406	460	493	557	591	663	713
1V:2H fill slope	Conc. (m³)	9.1	10.3	11.6	12.9	14.2	15.7	17.1	18.7
	Steel (kg)	428	485	542	595	660	715	783	851
Add. Conc. per pipe (m³)		1.2	1.4	1.6	1.8	2.1	2.4	2.7	3.0
Add. Steel per pipe (kg)		61	69	78	86	101	107	127	133

DIMENSIONS AND QUANTITIES FOR 45° SKEW PIPE

		D (Diameter of pipe culvert)							
		1050	1200	1350	1500	1650	1800	1950	2100
	A	5315	5895	6460	7040	7610	8190	8760	9340
	C	5620	6200	6765	7345	7915	8495	9065	9645
	H	1830	2085	2335	2590	2845	3100	3350	3605
1V:1.5H fill slope	Conc. (m³)	8.6	9.8	11.0	12.3	13.6	14.9	16.3	17.8
	Steel (kg)	420	470	535	575	659	699	774	836
1V:2H fill slope	Conc. (m³)	10.3	11.7	13.2	14.7	16.2	17.9	19.6	21.3
	Steel (kg)	494	562	631	690	778	840	921	997
Add. Conc. per pipe (m³)		1.4	1.7	2.0	2.3	2.6	2.9	3.3	3.6
Add. Steel per pipe (kg)		72	81	102	109	131	138	159	166

NO SCALE

U.S. DEPARTMENT OF TRANSPORTATION
FEDERAL HIGHWAY ADMINISTRATION
OFFICE OF FEDERAL LANDS HIGHWAY

METRIC FLH STANDARD

CONCRETE HEADWALL/WINGWALL FOR MULTIPLE SKEW 1050 TO 2100 PIPE CULVERT

STANDARD APPROVED FOR USE 3/1996
REVISED: 5/1997 6/2005

STANDARD
M601-8

c:\pw-work\d0147408\Std601-8.dgn [Std M601-8]
22 February 2023 11:29 AM