STATE	PROJECT	SHEET NUMBER

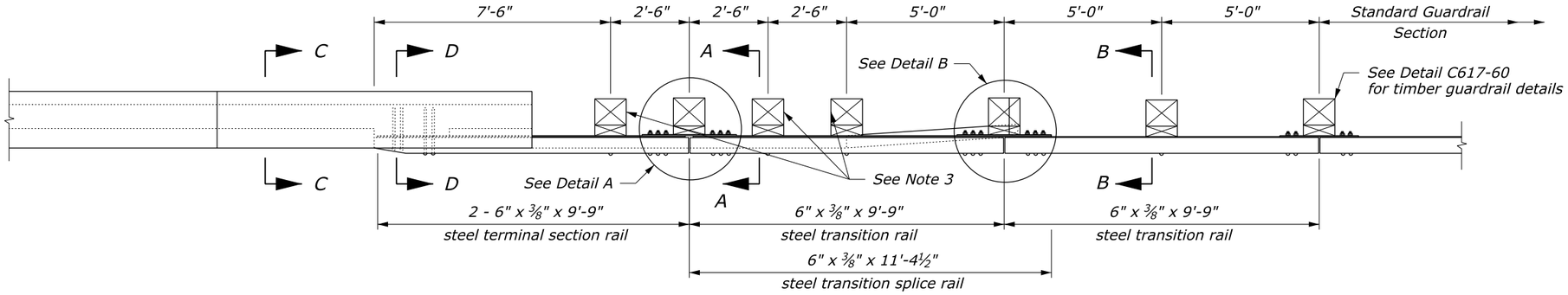

PLAN

NOTE:

1. See the following sheets for Sections A-A through D-D, steel rail layouts, and other details.
2. Use weathering steel for all structural steel and fastener hardware.
3. For posts 1, 3, and 4, use an 8" x 9" x 12" block for the blockout, and a ⅝" x 2'-1½" carriage bolt with hex nut and plate washer.

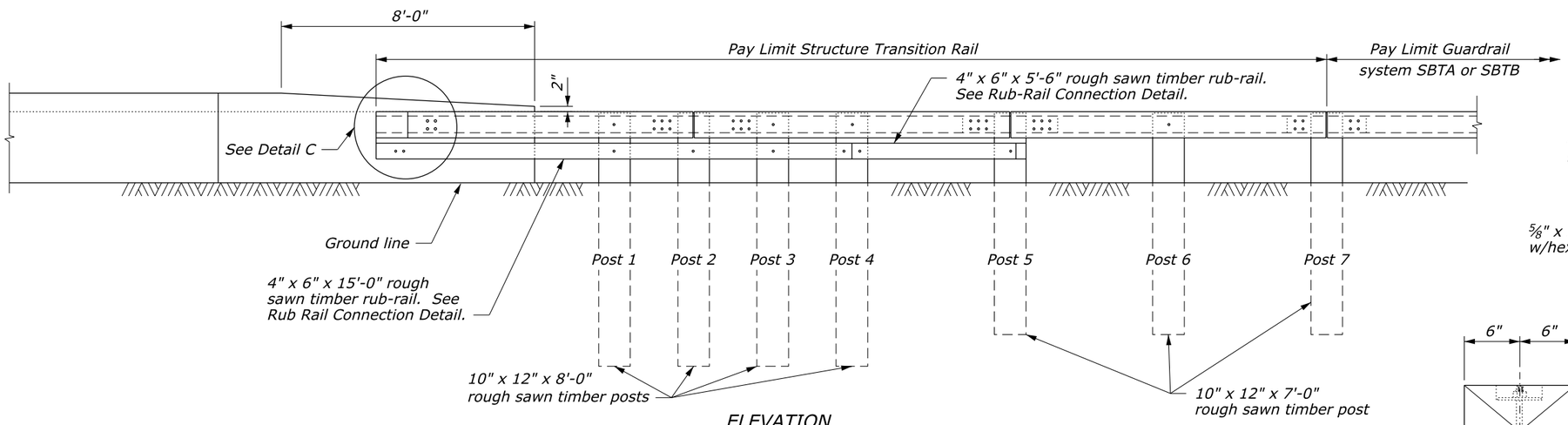

ELEVATION

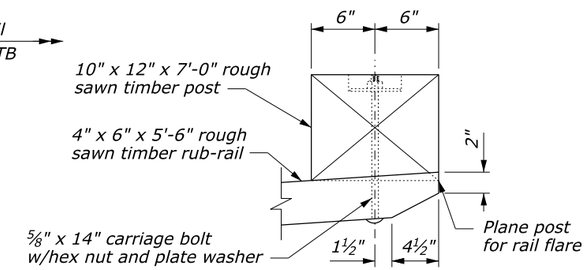

POST 5

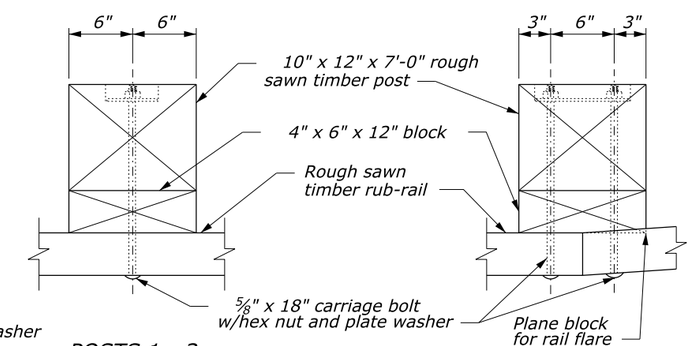

POSTS 1 - 3

POST 4

RUB-RAIL CONNECTION

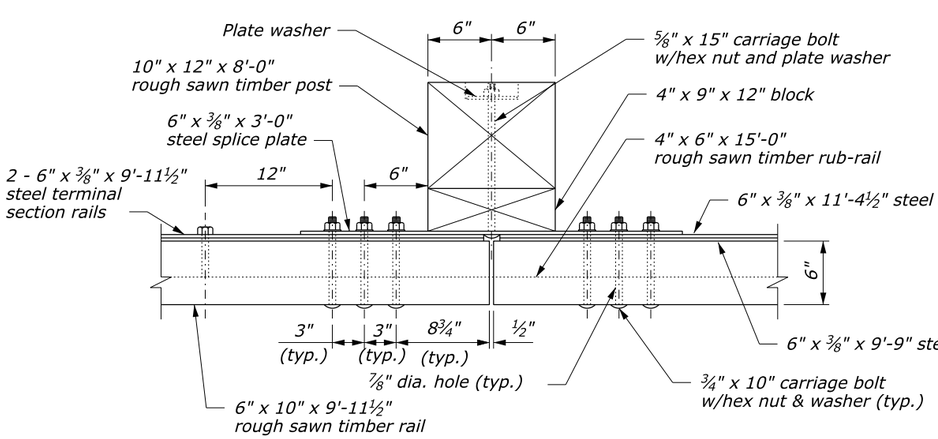

DETAIL A

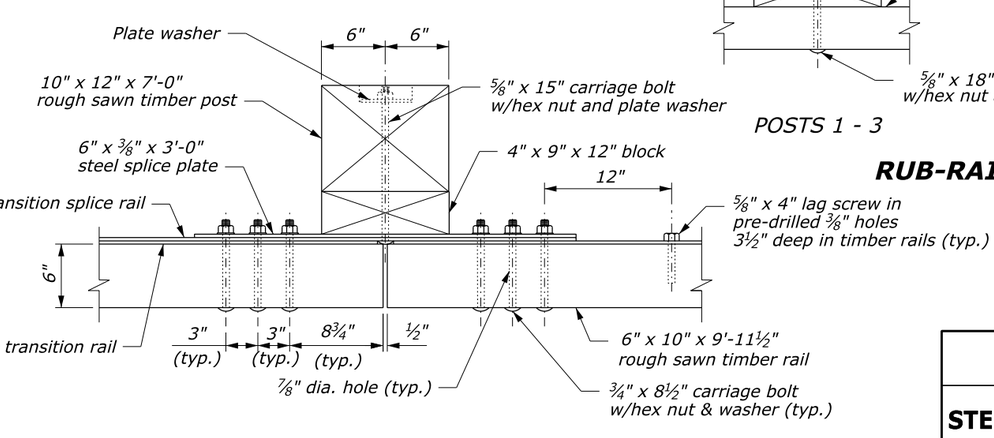

DETAIL B

POST CONNECTION

NO SCALE

U.S. DEPARTMENT OF TRANSPORTATION
FEDERAL HIGHWAY ADMINISTRATION
CENTRAL FEDERAL LANDS HIGHWAY DIVISION

U.S. CUSTOMARY DETAIL

STEEL-BACKED TIMBER GUARDRAIL TL-2 CONNECTION TO STONE MASONRY GUARDWALL

Sheet 1 of 3

DETAIL APPROVED FOR USE 02/2019

REVISED:

DETAIL C617-64

User: Angela.Johnson
N:\CFL-DPIT\Black\Section617DrawingUpdates\Details\C617-64.dgn
9:24:44 AM
2/25/2019

STATE	PROJECT	SHEET NUMBER

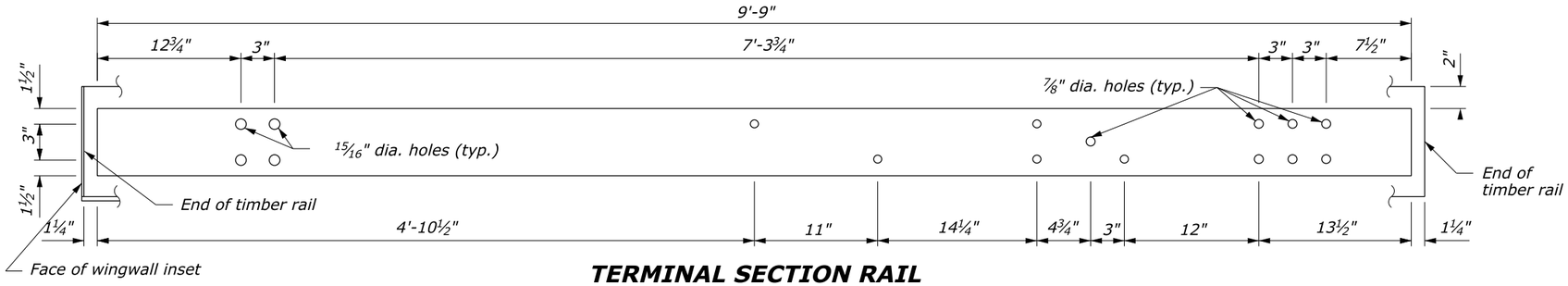

TERMINAL SECTION RAIL
6" x ⅜" x 9'-9"

NOTE:

1. Pre-drill ¾" holes in blocks outs and posts.

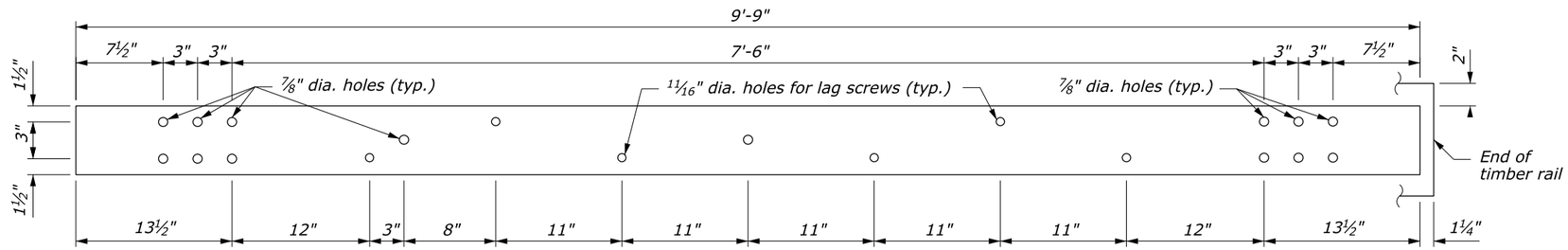

TRANSITION RAIL
6" x ⅜" x 9'-9"

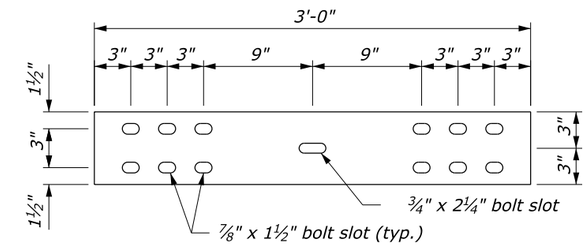

SPLICE PLATE
6" x ⅜" x 3'-0"

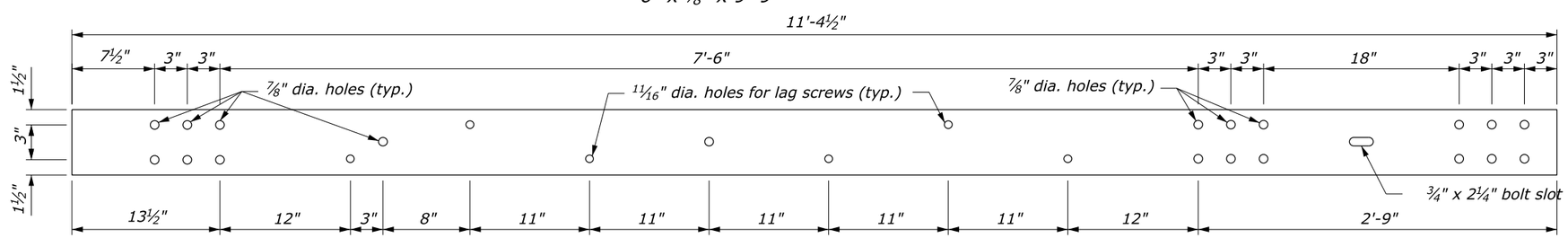

TRANSITION SPLICE RAIL
6" x ⅜" x 11'-4½"

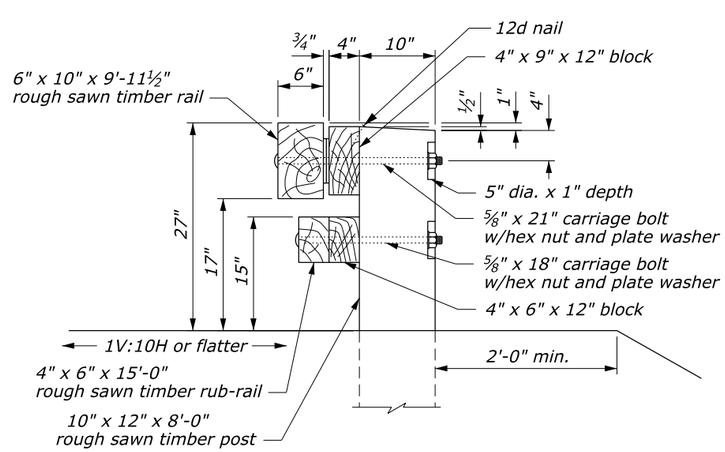

SECTION A-A

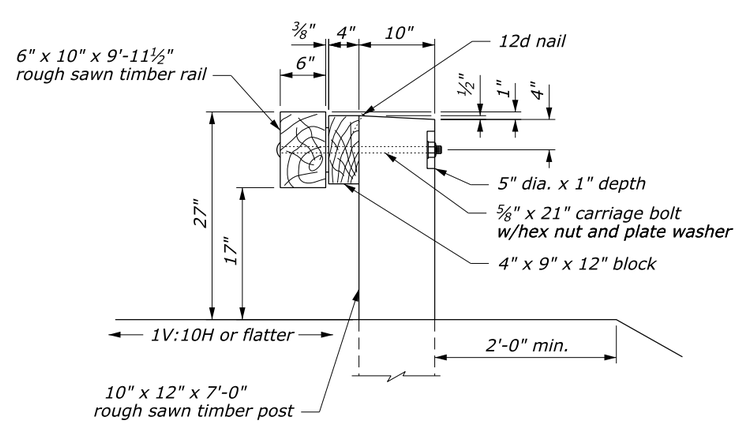

SECTION B-B

NO SCALE

U.S. DEPARTMENT OF TRANSPORTATION
FEDERAL HIGHWAY ADMINISTRATION
CENTRAL FEDERAL LANDS HIGHWAY DIVISION

U.S. CUSTOMARY DETAIL

STEEL-BACKED TIMBER GUARDRAIL TL-2 CONNECTION TO STONE MASONRY GUARDWALL

Sheet 2 of 3

DETAIL APPROVED FOR USE 02/2019

REVISED:

DETAIL C617-64

User: Angela.Johnson
N:\CFL-DPIT\Black\Section617DrawingUpdates\Details\C617-64.dgn
9:26:20 AM
2/25/2019

STATE	PROJECT	SHEET NUMBER

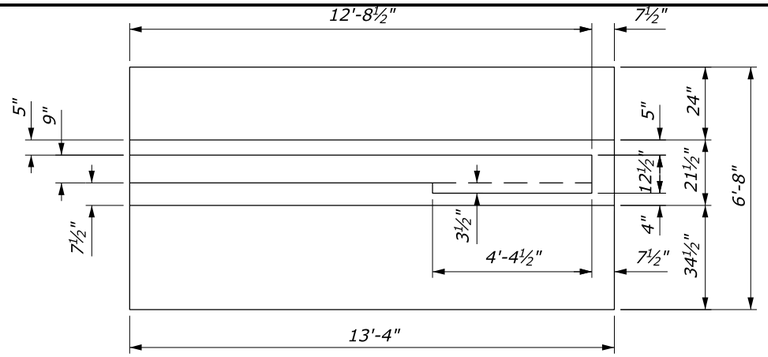

PLAN

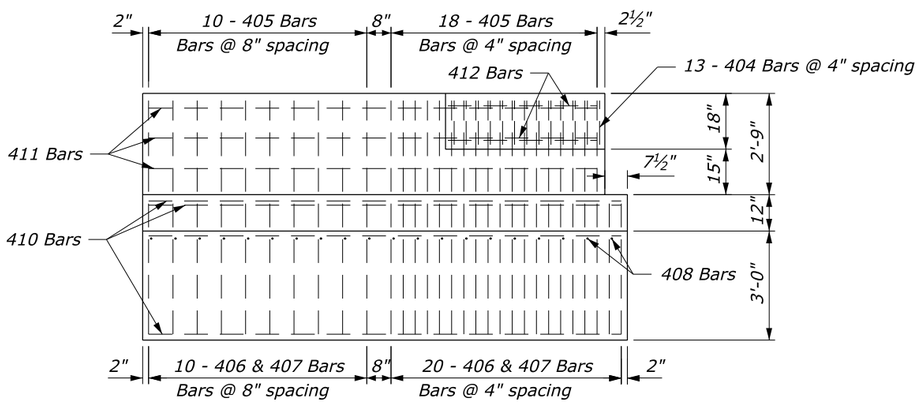

ELEVATION

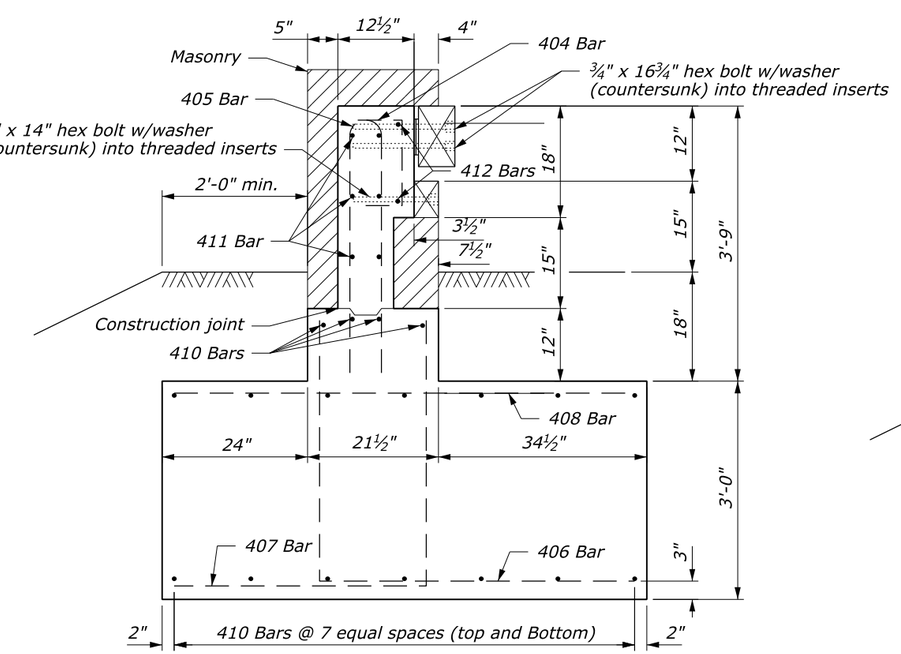

SECTION D-D

PARAPET END BLOCK

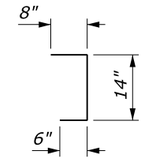

404 Bars

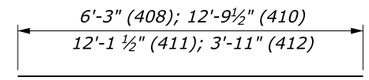

408, 410, 411, and 412 Bars

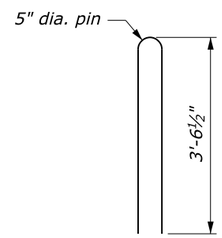

405 Bars

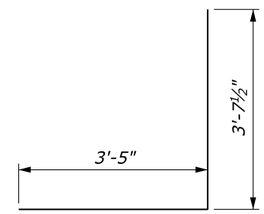

405 Bars

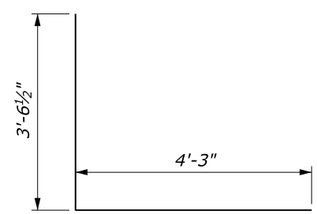

406 Bars

BAR DETAILS

NOTE:

1. CONCRETE: Structural concrete Class A(AE), with a specified minimum 28-day compressive strength F'c=4350 psi. Vibrate all concrete. Chamfer exposed edges ¾" unless otherwise shown. Do not use calcium chloride additives in the concrete.
2. REINFORCING STEEL: Reinforcing steel Grade 420 (ASTM A615M-96a, Grade 420) deformed billet steel bars conforming to AASHTO M31M. The minimum concrete covering to the face of any bar is 2" unless otherwise shown. All bars are US Customary size #5.
3. Construct footing against undisturbed material or backfill with well compacted granular material.

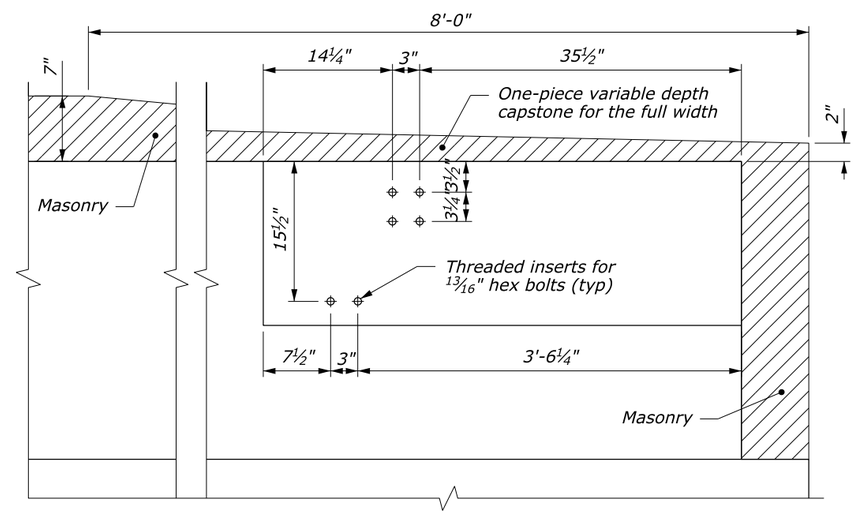

DETAIL C

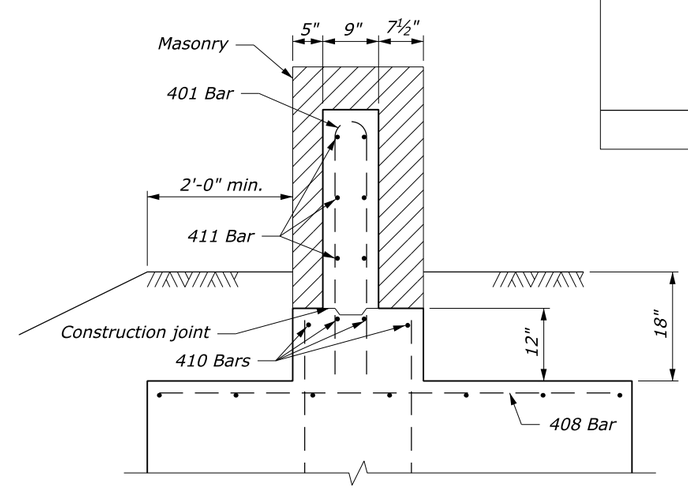

SECTION C-C

NO SCALE

U.S. DEPARTMENT OF TRANSPORTATION
FEDERAL HIGHWAY ADMINISTRATION
CENTRAL FEDERAL LANDS HIGHWAY DIVISION

U.S. CUSTOMARY DETAIL

STEEL-BACKED TIMBER GUARDRAIL TL-2 CONNECTION TO STONE MASONRY GUARDWALL

Sheet 3 of 3

DETAIL APPROVED FOR USE 02/2019

REVISED:

DETAIL C617-64

User: Angela.Johnson
2/25/2019 9:41:13 AM N:\CFL-DPIT\Black\Section617DrawingUpdates\Details\C617-64.dgn

Central Federal Lands Highway Division
US Department of Transportation - Federal Highway Administration

NOTES TO THE DESIGNER
Last Updated: February 2019

Steel-Backed Timber Guardrail TL-2 Connection to Stone Masonry Guardwall

General Information

Appropriate Applications.

- Steel-backed timber (SBT) guardrail is an aesthetic roadside barrier. This drawing provides a low-speed (TL-2) connection to stone masonry guardwalls.

Crash Test Criteria	NCHRP 350
Test Level	TL-2
FHWA Eligibility Letter	B-64D2
TF 13 Designator	Not posted
Crash Test Report	TTI Report No. 405181

Limitations. This connection is for low-speed roadways.

Layout Guidance.

Applicable SCRs

None

Typical Pay Item Used

- 61707-2000 Structure transition railing, SBT system [LNFT]

Updates

February 2019

- New Detail drawing