STATE	PROJECT	SHEET NUMBER

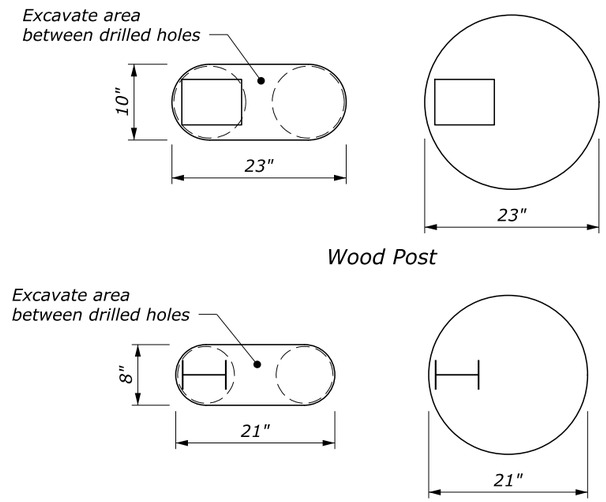

PLAN VIEW

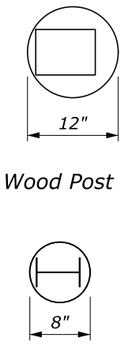

PLAN VIEW

NOTE:

1. Use this standard when posts cannot be embedded to the minimum depth shown on ET Details 617-10 or 617-11.
2. Unless otherwise specified use either the circular or the oblong hole configuration for Case 1 conditions.
3. Crushed coarse aggregate backfill conforms to "coarse aggregate for concrete" or "granular backfill for underdrain pipe with geotextile" in Section 703.
4. Place crushed coarse aggregate according to the post requirements in Section 617.
5. Treat field cut galvanized steel post surfaces that expose the base metal with two coats of zinc-oxide paint.

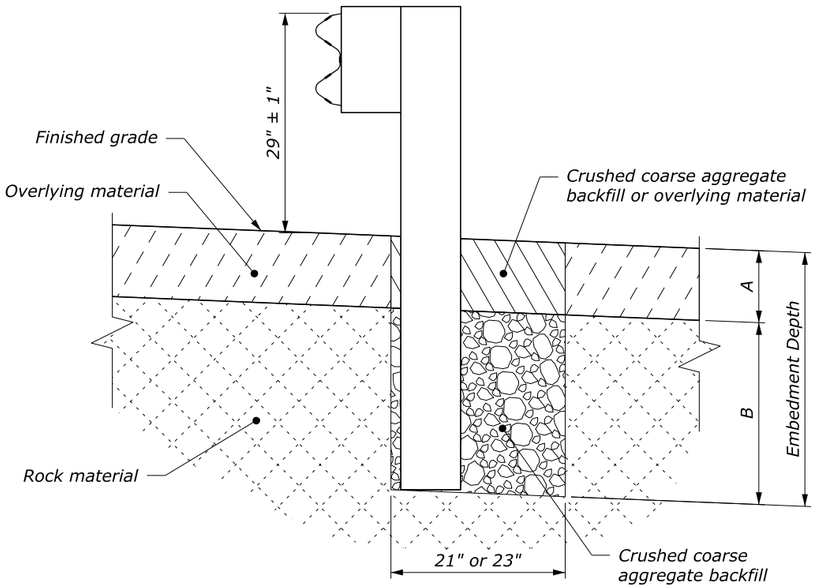

ELEVATION

Case 1: Overlying material depth (A) is 18" or less.

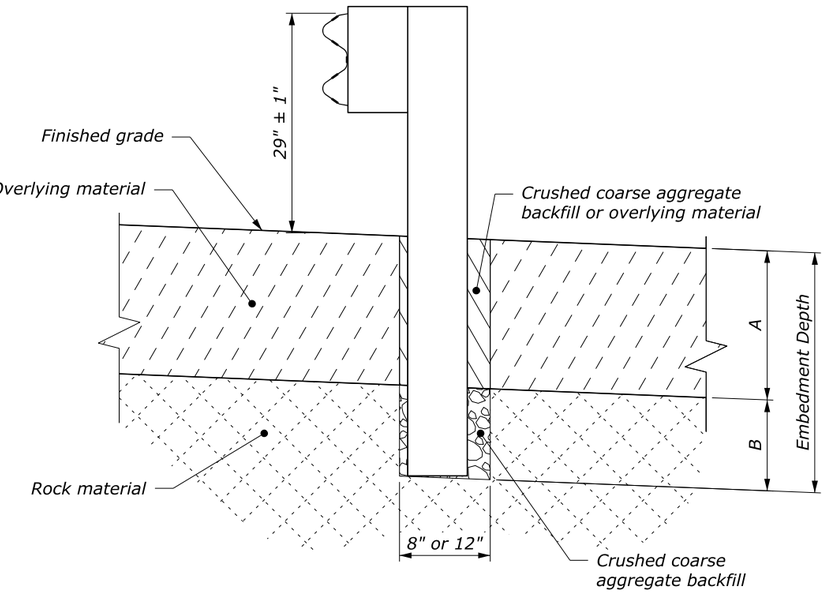

ELEVATION

Case 2: Overlying material depth (A) is greater than 18".

POST EMBEDMENT DIMENSIONS			
HOLE TYPE	EMBEDMENT DEPTH	OVERLYING MATERIAL (A)	DRILLING DEPTH (B)
Case 1	24" to 42"	0 to 18"	24"
Case 2	30" to 42"	> 18" to 30"	12"
	42"	> 30"	42" - A

NO SCALE

U.S. DEPARTMENT OF TRANSPORTATION
FEDERAL HIGHWAY ADMINISTRATION
EASTERN FEDERAL LANDS HIGHWAY DIVISION

U.S. CUSTOMARY DETAIL

G4 W-BEAM GUARDRAIL INSTALLATION IN ROCK

REVISED: 6/2014 5/2016

DETAIL
ET 617-13

30-Jan-2020 08:19 AM C:\Users\LahoucineOuhssayne\AppData\Local\Microsoft\Windows\INetCache\IE\ANOKOO9L\st617l3_G4_EFL_TEMP.dgn