STATE	PROJECT	SHEET NUMBER

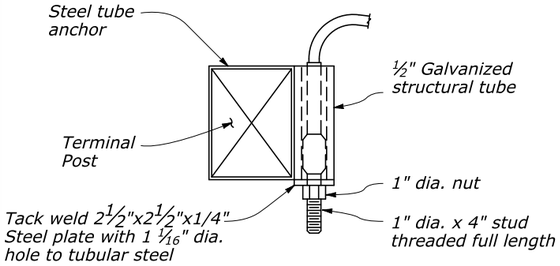

DETAIL 'A'

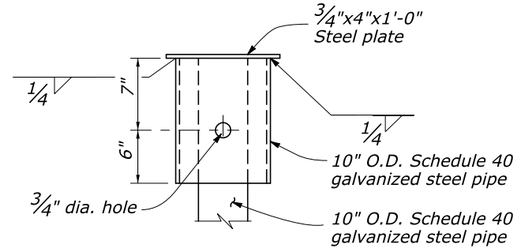

DETAIL 'B'

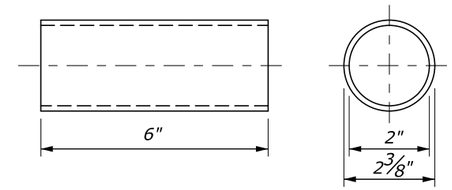

BREAKWAY TERMINAL POST SLEEVE
ARTBA F-34-76

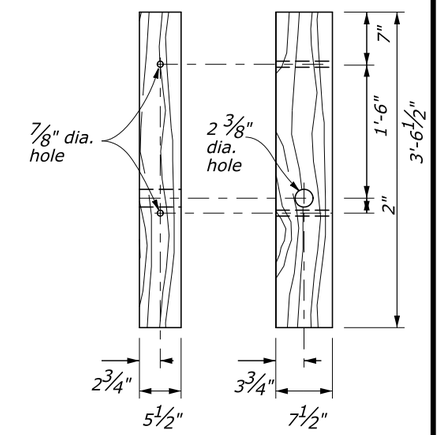

TERMINAL POST

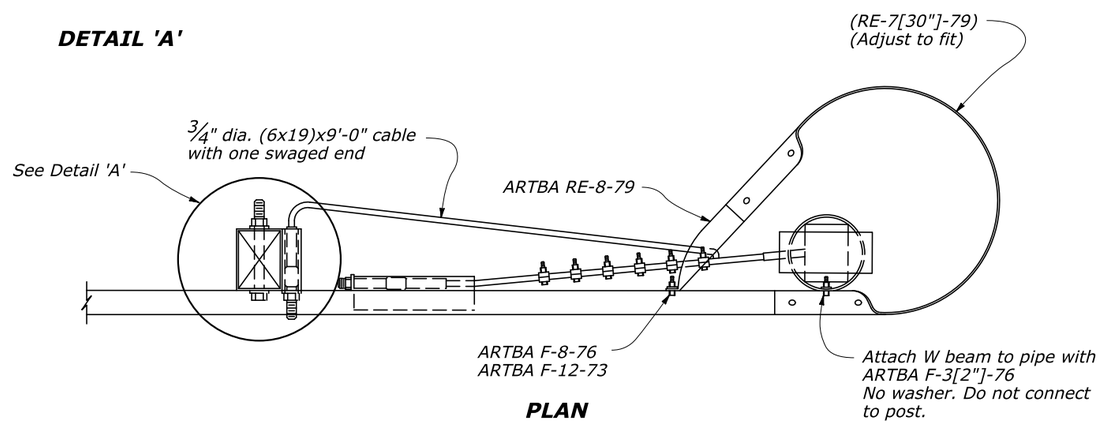

PLAN

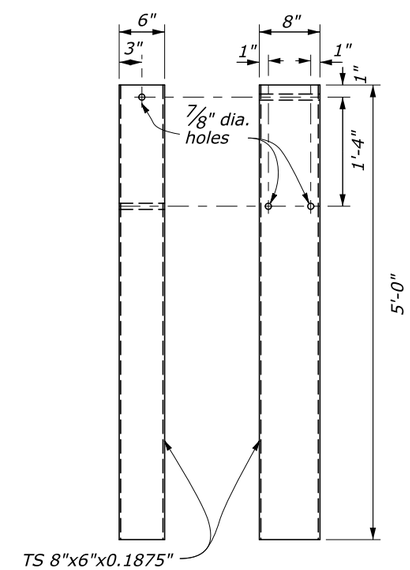

STEEL TUBE ANCHOR

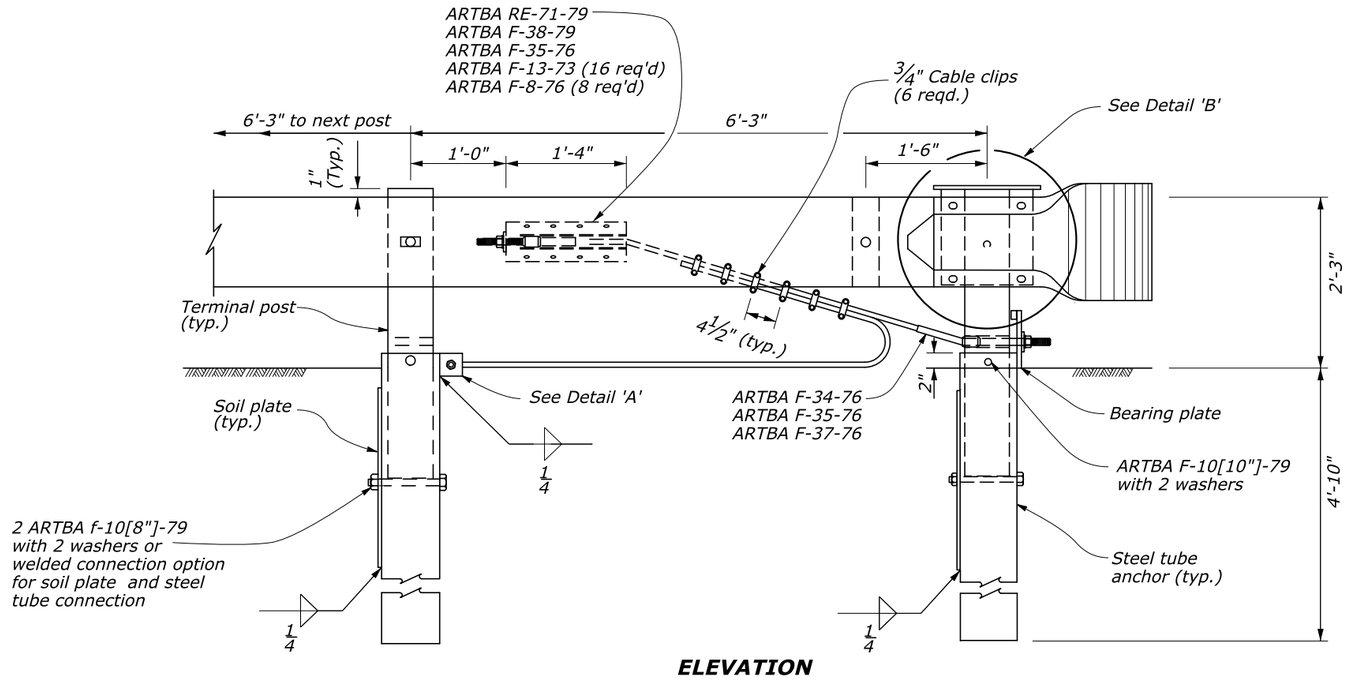

ELEVATION

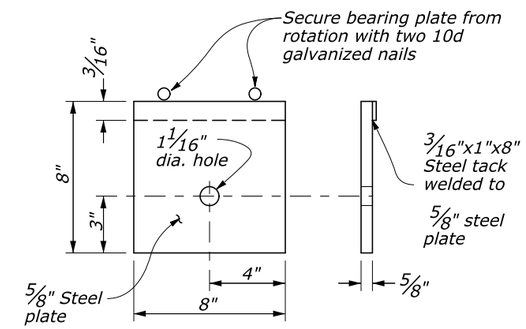

BEARING PLATE

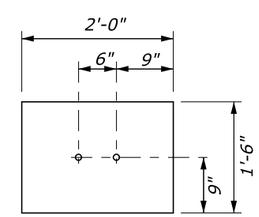

SOIL PLATE (2 REQD.)

NO SCALE

U.S. DEPARTMENT OF TRANSPORTATION
FEDERAL HIGHWAY ADMINISTRATION
EASTERN FEDERAL LANDS HIGHWAY DIVISION

U.S. CUSTOMARY DETAIL

CRT W BEAM GUARDRAIL
STEEL TUBE ANCHOR
CRT ANCHORAGE ASSEMBLY
CRT POSTS

DETAIL APPROVED FOR USE

APPROVED : MAY 2011
REVISED: SEPTEMBER 2014

DETAIL
E617-22

01-Dec-2014 02:25 PW$TIME$ H:\Team_Folders\HDX\FP_14_Detail_Review\ALL_FP14_DGN\sf617-22_detail.dgn