STATE	PROJECT	SHEET NUMBER

NOTES:

1. See Sheet 2 of 3 for Sections A-A through C-C, and post connection Detail A. See Sheet 3 of 3, for steel rail details.
2. Use weathering steel for all structural steel and fastener hardware.
3. Transition shown for curved end structure. For transition to a straight parapet end, install the timber rail so that the face of the timber rail is offset 1-inch towards the roadway.

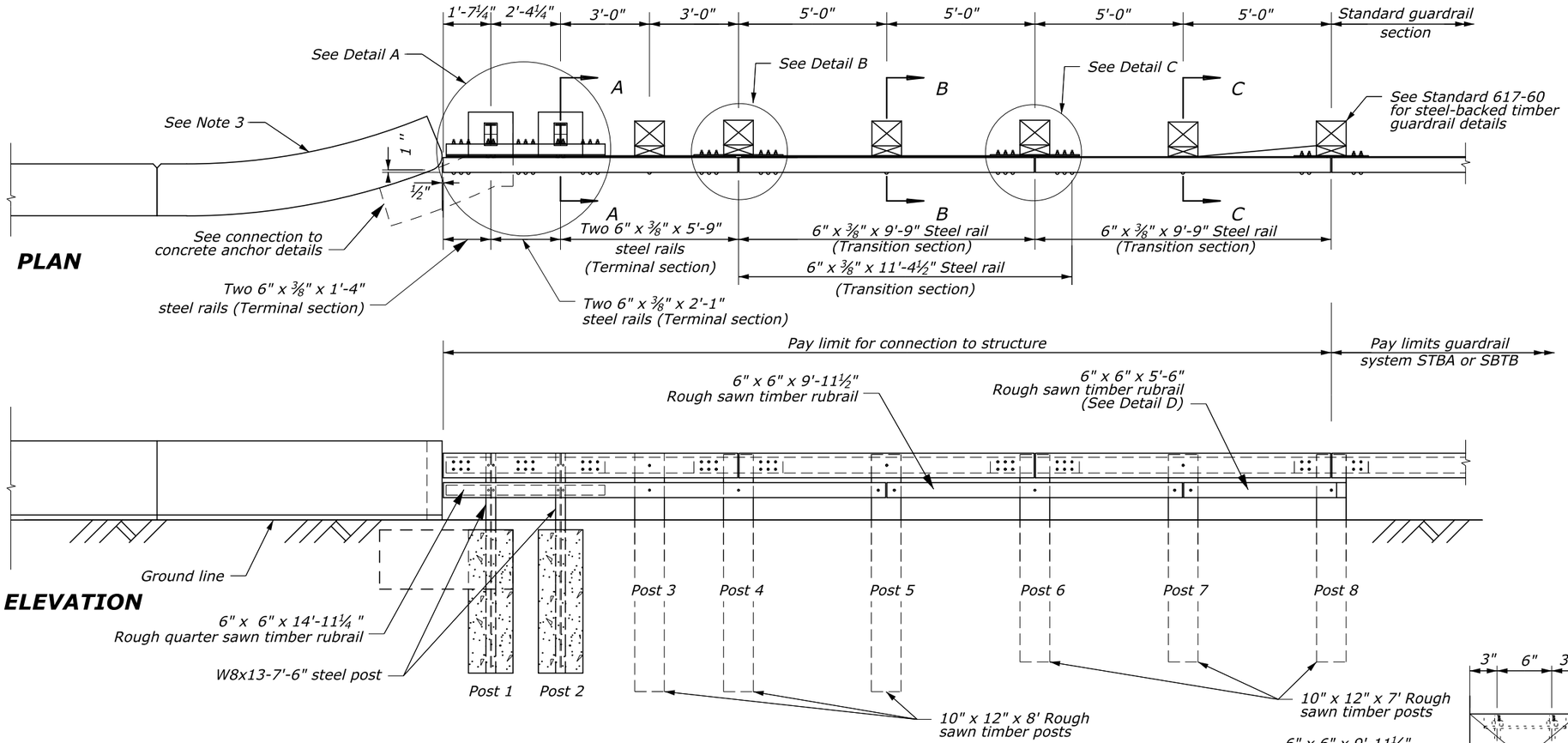

PLAN

ELEVATION

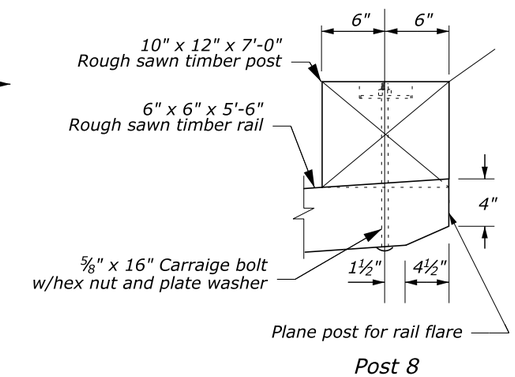

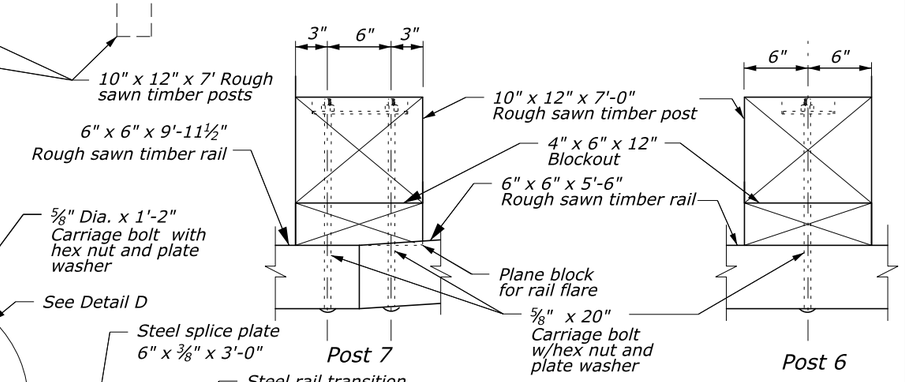

DETAIL D

RUBRAIL CONNECTION PLAN

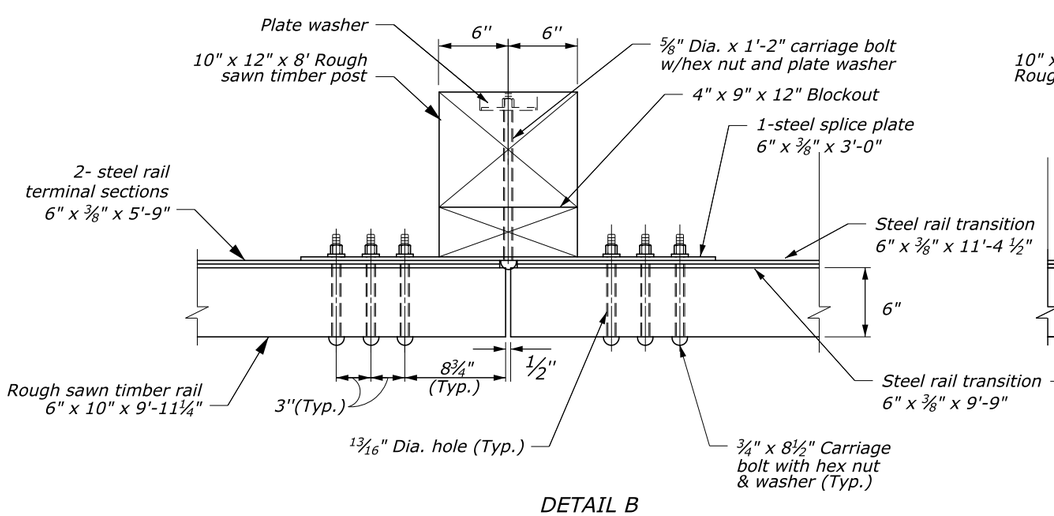

DETAIL B

POST CONNECTION PLAN

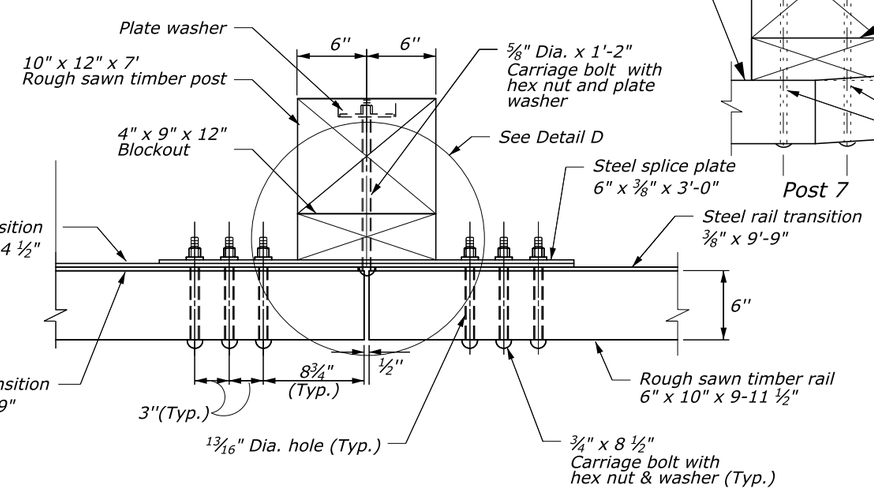

DETAIL C

POST CONNECTION PLAN

NO SCALE

U.S. DEPARTMENT OF TRANSPORTATION
FEDERAL HIGHWAY ADMINISTRATION
EASTERN FEDERAL LANDS HIGHWAY DIVISION

U.S. CUSTOMARY DETAIL

STEEL-BACKED TIMBER GUARDRAIL TEST LEVEL 2 TRANSITION TO STRAIGHT OR CURVED-END STRUCTURE

Sheet 1 of 3

DETAIL APPROVED FOR USE

APPROVED: MAY 2011
REVISED: MAY 2020

DETAIL E617-67

02-Jun-2020 07:34 PM M:\PROJECTS\...COLLABORATION\Louhssayne_04162020_EFL-Details-Updates\617\st617_detail.dgn

STATE	PROJECT	SHEET NUMBER

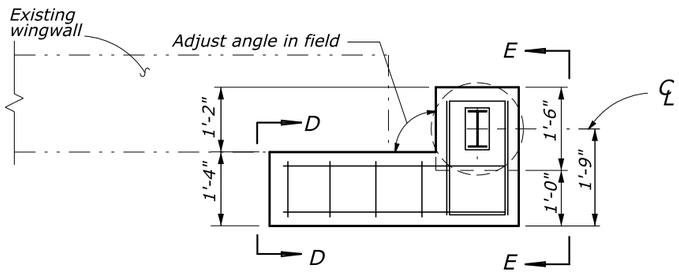

PLAN FOR NON-FLARED WINGWALL

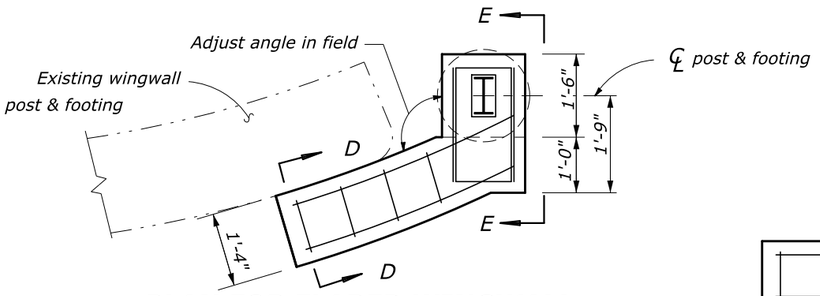

PLAN FOR FLARED WINGWALL

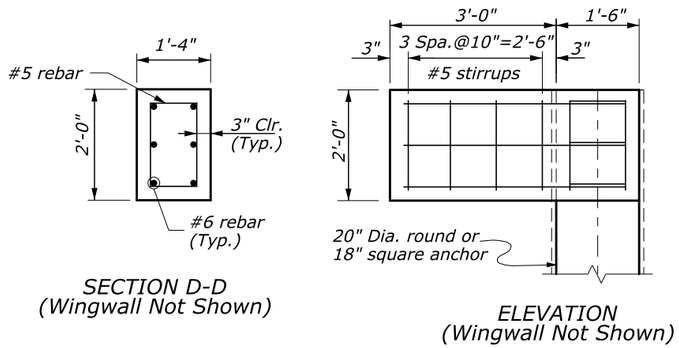

SECTION D-D
(Wingwall Not Shown)

ELEVATION
(Wingwall Not Shown)

CONNECTION TO CONCRETE ANCHOR (Post Not Shown)

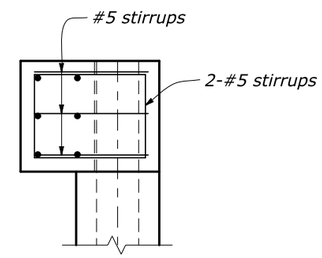

SECTION E-E

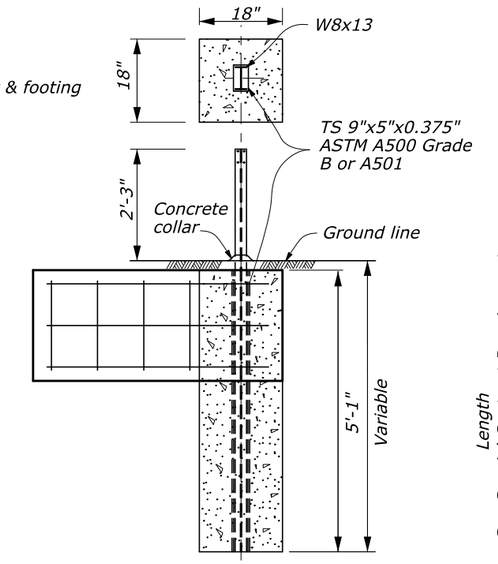

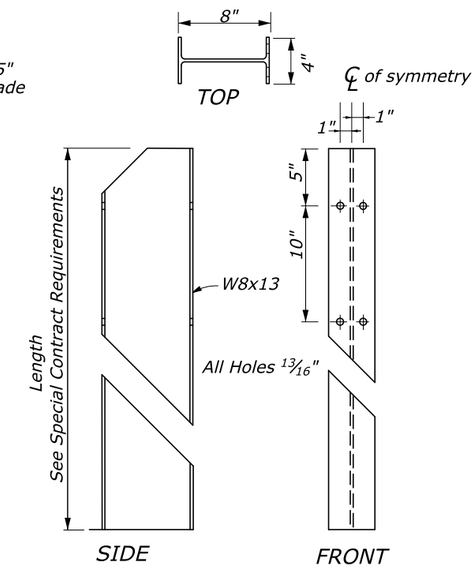

CONCRETE ANCHOR FOR GUARDRAIL POST

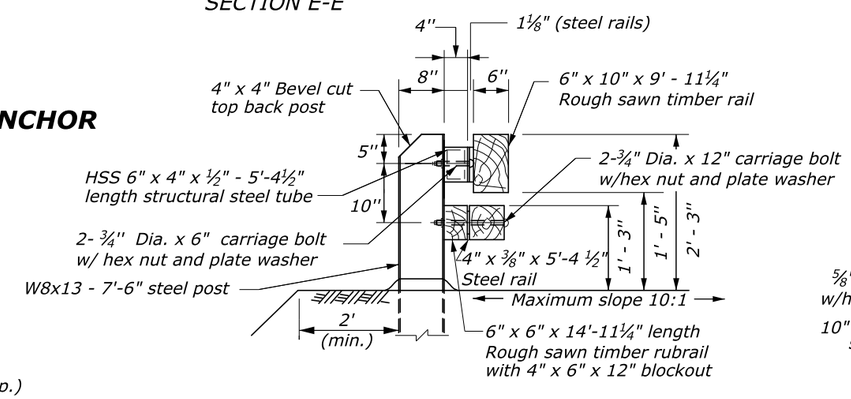

SECTION A-A

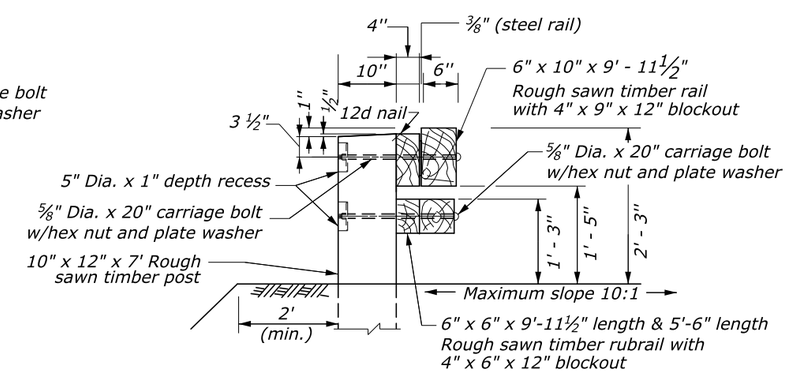

SECTION C-C

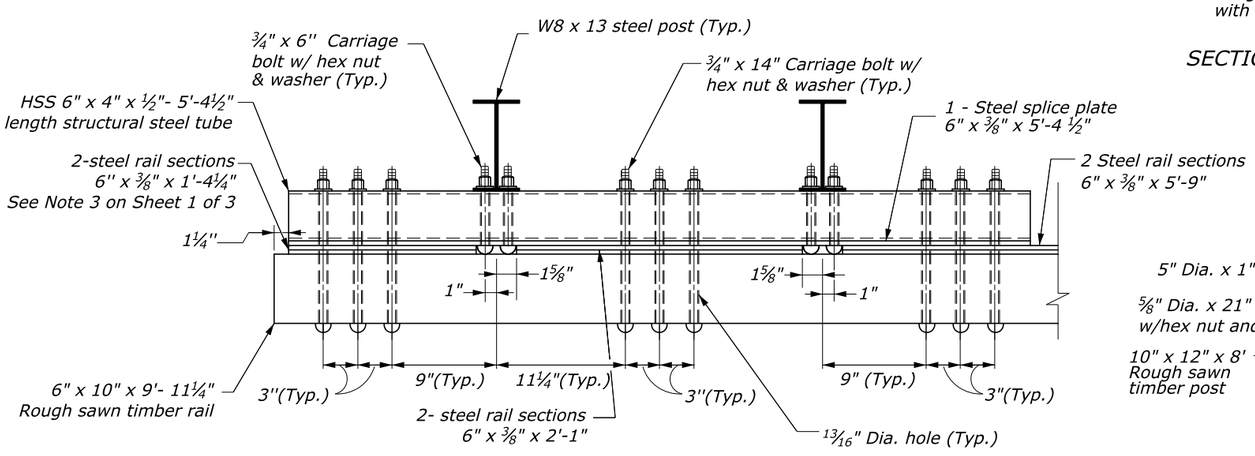

DETAIL A

POST CONNECTION PLAN

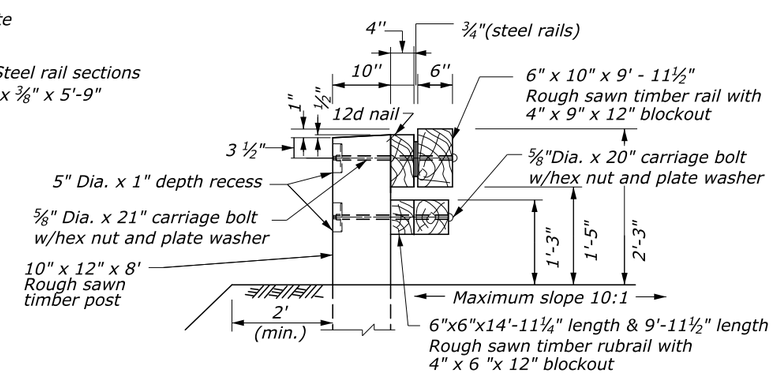

SECTION B-B

NO SCALE

U.S. DEPARTMENT OF TRANSPORTATION
FEDERAL HIGHWAY ADMINISTRATION
EASTERN FEDERAL LANDS HIGHWAY DIVISION

U.S. CUSTOMARY DETAIL

STEEL-BACKED TIMBER GUARDRAIL TEST LEVEL 2 TRANSITION TO STRAIGHT OR CURVED-END STRUCTURE
Sheet 2 of 3

DETAIL APPROVED FOR USE

APPROVED: MAY 2011
REVISED: MAY 2020

DETAIL
E617-67

02-Jun-2020 07:26 PM M:\PROJECTS__COLLABORATION\Ojhssoyne_04162020_EFL-Details-Updates\6\F\v\f6\f67_detail.dgn

STATE	PROJECT	SHEET NUMBER

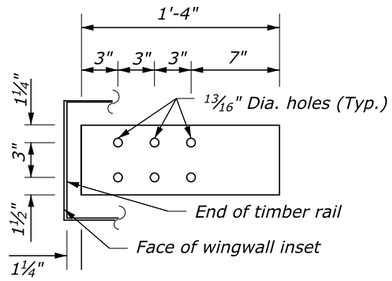

TERMINAL SECTION 6" x ⅜" x 1'-4"

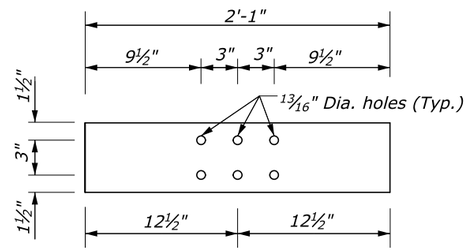

TERMINAL SECTION 6" x ⅜" x 2'- 1 "

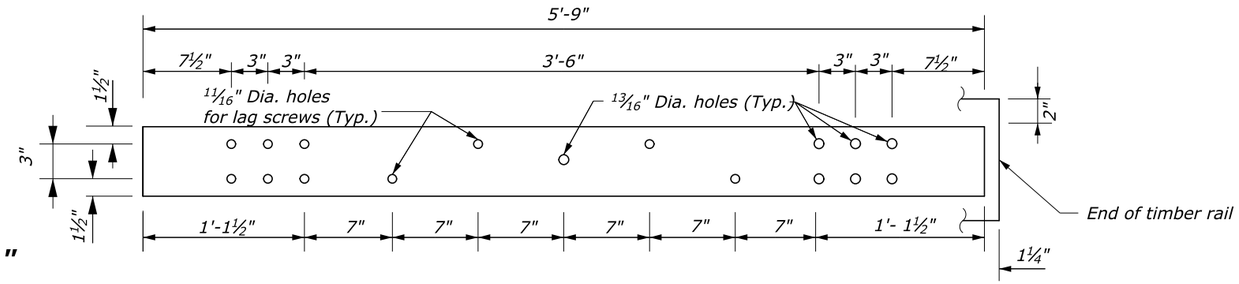

TERMINAL SECTION 6" x ⅜" x 5'- 9"

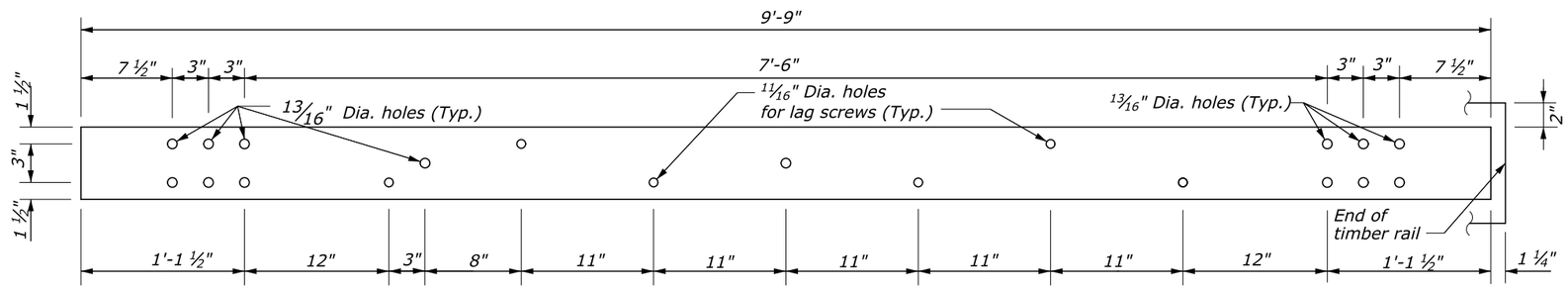

TRANSITION SECTION 6" x ⅜" x 9'-9"

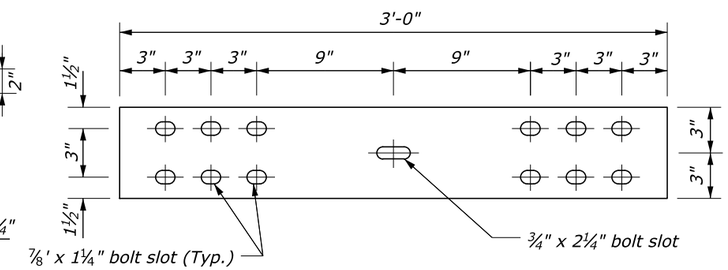

STEEL SPLICE PLATE 6" x ⅜" x 3'-0"

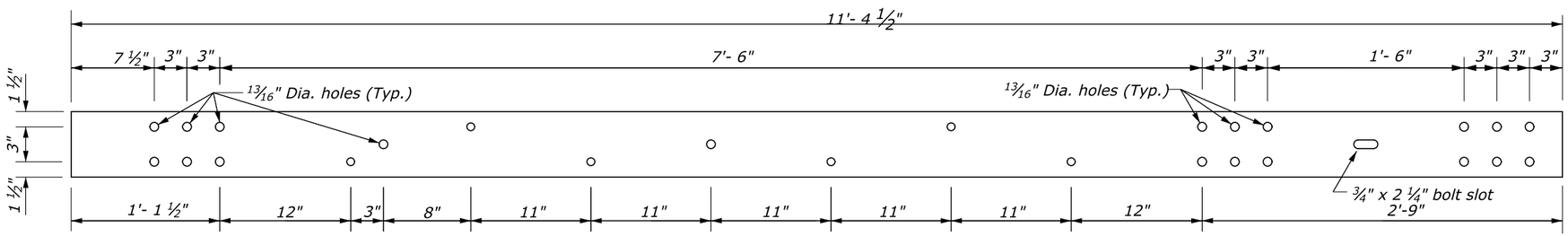

TRANSITION SECTION 6" x ⅜" x 11'-4½"

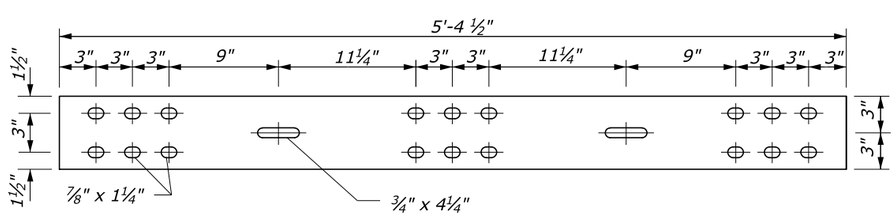

STEEL SPLICE PLATE 6" x ⅜" x 5'-4½"

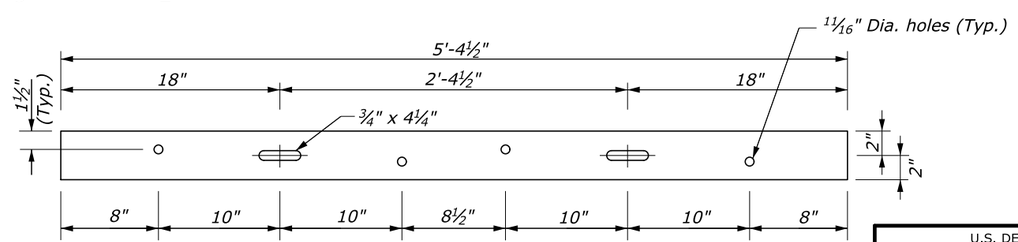

TERMINAL SECTION (RUBRAIL) 4" x ⅜" x 5'-4 ½"

NO SCALE

U.S. DEPARTMENT OF TRANSPORTATION
FEDERAL HIGHWAY ADMINISTRATION
EASTERN FEDERAL LANDS HIGHWAY DIVISION

U.S. CUSTOMARY DETAIL

STEEL-BACKED TIMBER GUARDRAIL TEST LEVEL 2 TRANSITION TO STRAIGHT OR CURVED-END STRUCTURE

Sheet 3 of 3

DETAIL APPROVED FOR USE

APPROVED: MAY 2011
REVISED: MAY 2020

DETAIL
E617-67

02-Jun-2020 07:27 PM M:\PROJECTS__COLLABORATION\Louhssayne_04162020_EFL-Details-Updates\617\sf617_detail.dgn