STATE	PROJECT	SHEET NUMBER

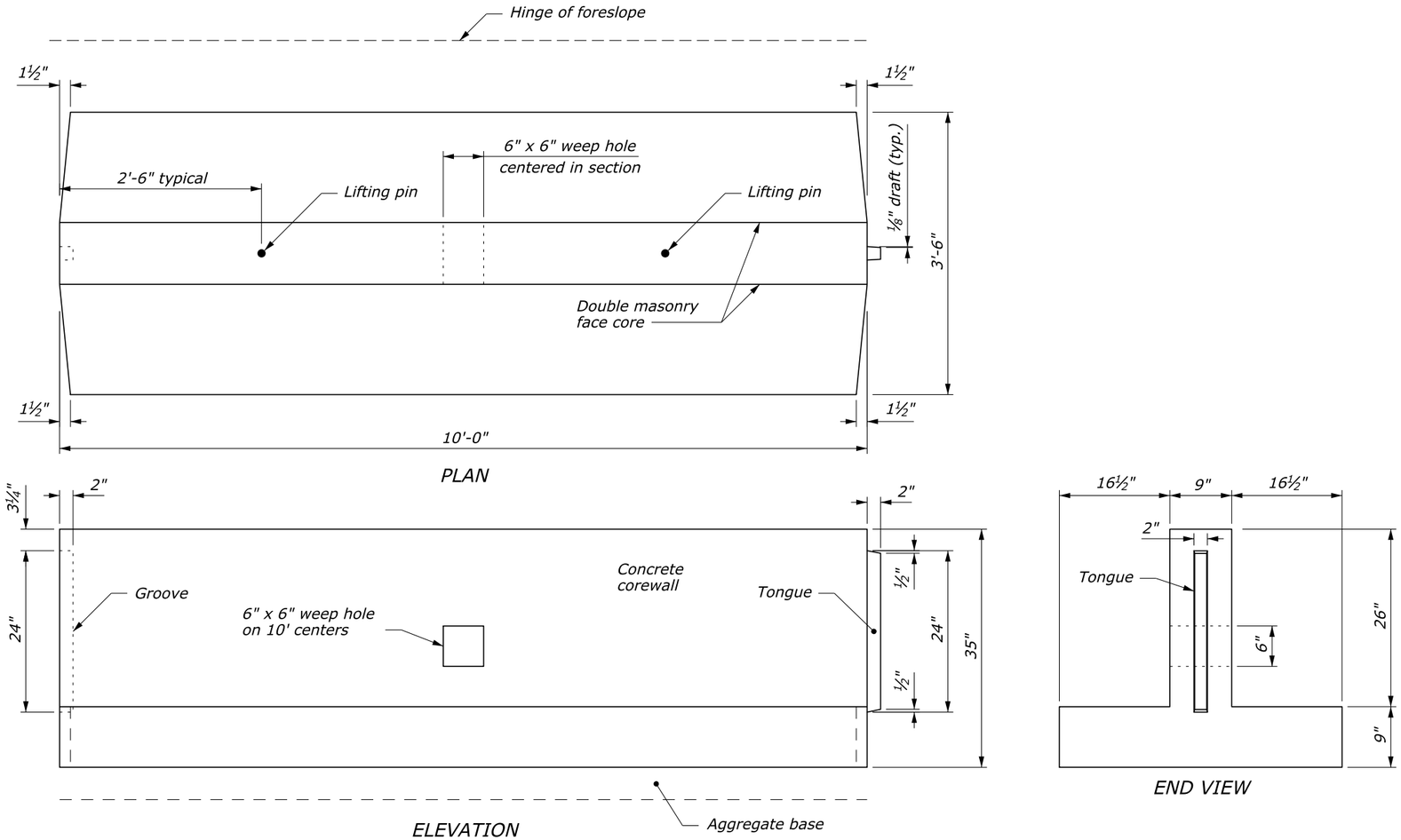

PRECAST CONCRETE COREWALL

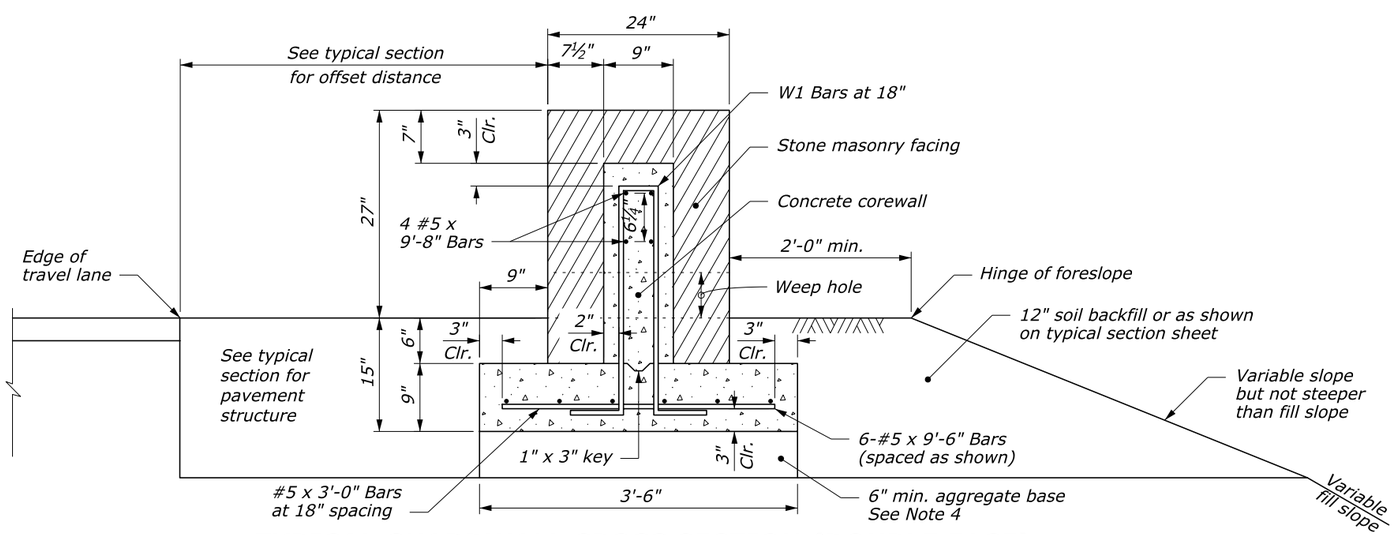

TYPICAL GUARDWALL CROSS SECTION (DOUBLE FACE)

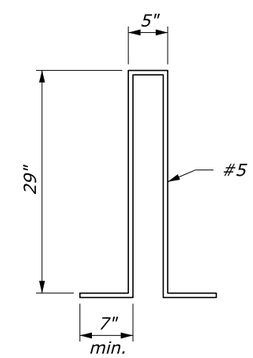

W1 BAR
BENDING DIAGRAM

NOTE:

1. Form construction joints in the corewall at 30-foot intervals or, at the option of the Contractor, the corewall may be constructed of precast concrete units.
2. On curves with radius less than 150 feet, the corewall is to be cast-in-place.
3. The depth of base may be less than 6" as directed by the CO, when the foundation is on either rock fill or solid rock.
4. Set galvanized metal slots with anchors for the stone work or other approved type of metal anchors in the concrete. Equivalent attachment systems are allowed with the approval of the CO.

NO SCALE

U.S. DEPARTMENT OF TRANSPORTATION
FEDERAL HIGHWAY ADMINISTRATION
EASTERN FEDERAL LANDS HIGHWAY DIVISION

U.S. CUSTOMARY DETAIL

STONE MASONRY GUARDWALL (DOUBLE FACE)

STANDARD APPROVED FOR USE 3/1990

REVISED: 4/1994 6/2005 9/2014

DETAIL
ET 620-2

02-Dec-2014 09:35 AM H:\Team_Folders\HDUG\FP_14_Detail_Review\ALL_FP14_DGN\st62002_EFL_TEMP.dgn