STATE	PROJECT	SHEET NUMBER

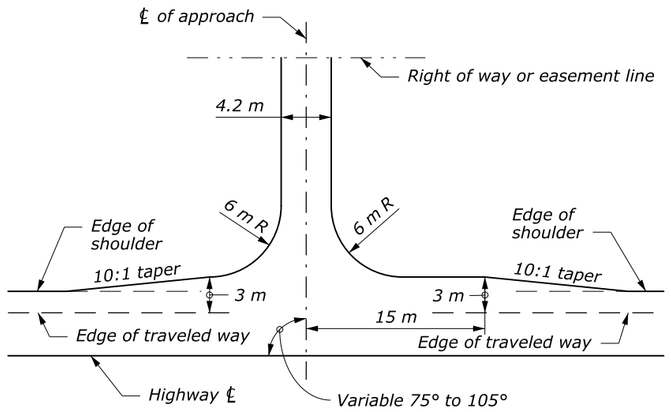

PLAN OF TYPE A APPROACH

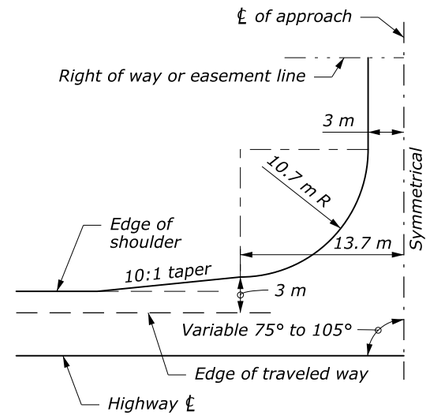

PLAN OF TYPE B APPROACH

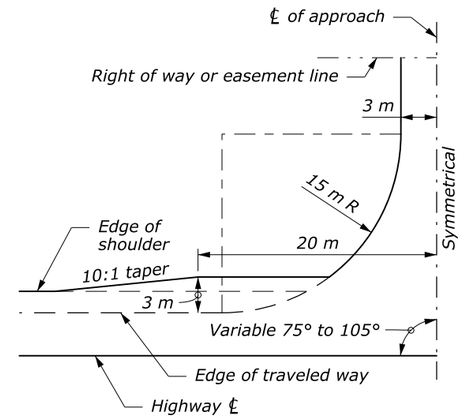

PLAN OF TYPE C APPROACH

NOTE:

1. Continue approach radius as required if connection to existing alignment of new approach is at an angle.
2. Finish type D and M approaches with the same treatment as shown for the adjacent roadbed.
3. Finish other approaches with the same treatment as shown on the adjacent roadbed, except that the surface course shall not exceed 40 mm in depth.
4. Extend paving to the right-of-way or easement line unless otherwise shown on the plans.
5. Construct side slope ratios and finish approaches compatible with the adjacent roadway construction.
6. Dimensions without units are millimeters.

TYPE M INTERSECTION DATA

SKEW θ	Δ1	Δ2	T1 m	T2 m	T3 m	T4 m	Area A m2	Area B m2
75°	67°35"	105°	11.04	21.50	39.52	16.56	127	105
76°	68°35"	104°	11.25	21.12	39.82	16.77	129	101
77°	69°35"	103°	11.46	20.74	40.13	16.99	132	98
78°	70°35"	102°	11.68	20.38	40.43	17.21	134	94
79°	71°35"	101°	11.90	20.02	40.74	17.44	137	90
80°	72°35"	100°	12.12	19.66	41.05	17.67	140	87
81°	73°35"	99°	12.34	19.32	41.37	17.91	143	84
82°	74°35"	98°	12.57	18.98	41.68	18.15	145	80
83°	75°35"	97°	12.79	18.65	42.01	18.39	148	77
84°	76°35"	96°	13.03	18.33	42.33	18.64	151	74
85°	77°35"	95°	13.26	18.01	42.66	18.90	154	71
86°	78°35"	94°	13.50	17.69	42.99	19.16	157	69
87°	79°35"	93°	13.74	17.39	43.33	19.43	161	66
88°	80°35"	92°	13.99	17.09	43.67	19.70	164	63
89°	81°35"	91°	14.24	16.79	44.02	19.98	168	61
90°	82°35"	90°	14.49	16.50	44.37	20.27	171	58
91°	83°35"	89°	14.75	16.21	44.73	20.56	175	56
92°	84°35"	88°	15.01	15.93	45.09	20.86	178	54
93°	85°35"	87°	15.27	15.66	45.45	21.16	182	52
94°	86°35"	86°	15.54	15.39	45.83	21.47	186	50
95°	87°35"	85°	15.82	15.12	46.21	21.79	190	48
96°	88°35"	84°	16.10	14.86	46.59	22.11	195	46
97°	89°35"	83°	16.38	14.60	46.98	22.45	199	44
98°	90°35"	82°	16.67	14.34	47.38	22.79	203	42
99°	91°35"	81°	16.96	14.09	47.79	23.13	208	40
100°	92°35"	80°	17.26	13.85	48.20	23.49	213	38
101°	93°35"	79°	17.57	13.60	48.62	23.85	218	37
102°	94°35"	78°	17.88	13.36	49.05	24.23	223	35
103°	95°35"	77°	18.19	13.12	49.48	24.61	228	34
104°	96°35"	76°	18.51	12.89	49.93	25.00	233	32
105°	97°35"	75°	18.84	12.66	50.38	25.40	239	31

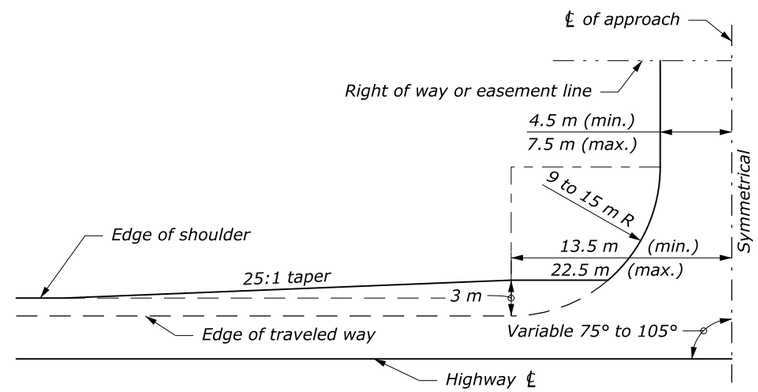

PLAN OF TYPE D APPROACH

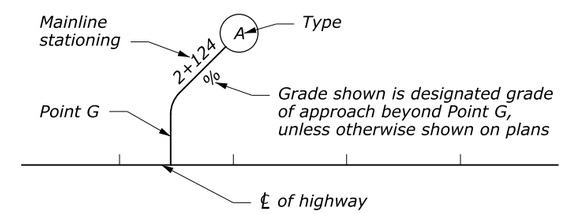

ROAD APPROACH LOCATIONS ON PLAN SHEETS

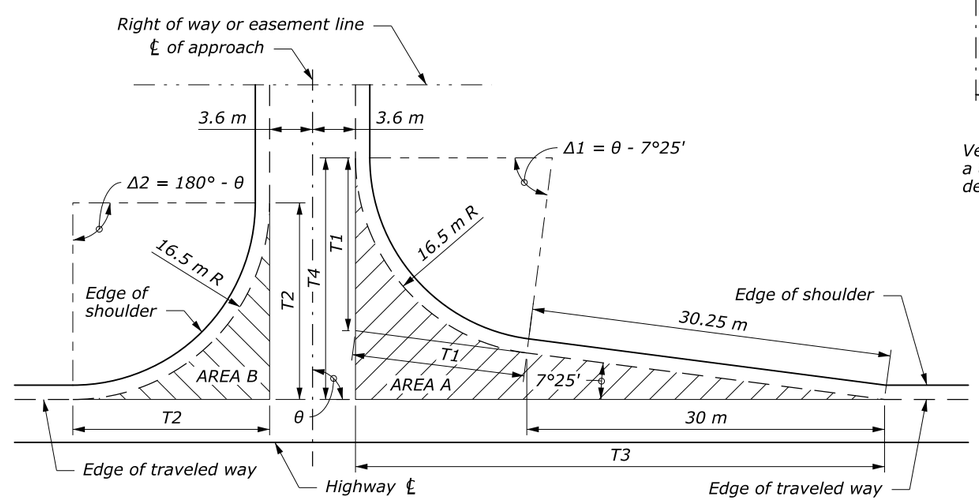

PLAN OF TYPE M APPROACH

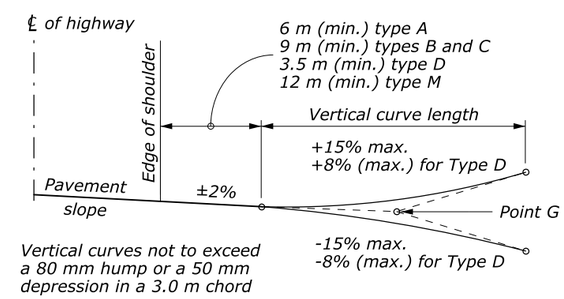

PROFILE OF TYPE A, B, C, D, M APPROACHES

NO SCALE

U.S. DEPARTMENT OF TRANSPORTATION
FEDERAL HIGHWAY ADMINISTRATION
WESTERN FEDERAL LANDS HIGHWAY DIVISION

METRIC DETAIL

WASHINGTON ROAD APPROACHES

DETAIL APPROVED FOR USE 2/2004

REVISED:
DRAFT: 11/2014

DETAIL
WM200-80

7 November 2014 11:11 AM c:\myfiles\pw_production\dms00743\Det.W200-80.dgn [Metric]