STATE	PROJECT	SHEET NUMBER

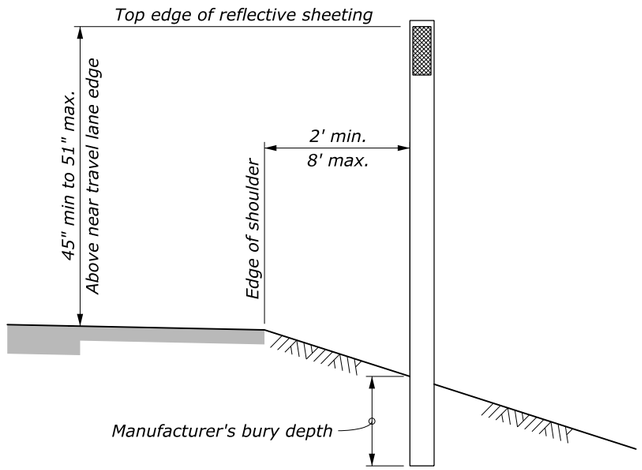

FLEXIBLE DELINEATOR
GROUND MOUNTED

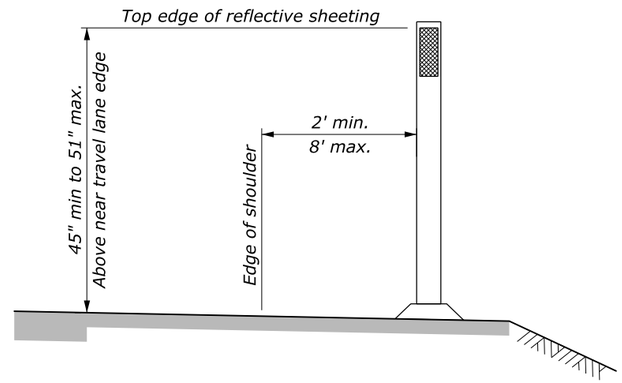

FLEXIBLE DELINEATOR
SURFACE MOUNTED

NOTE:

1. When a delineator falls within a cross road or approach, the delineator may be moved in either direction a distance not to exceed one quarter of the normal spacing. Eliminate the delineator if this allowance is exceeded.
2. Place delineators 2 feet from the edge of design shoulder unless otherwise specified.
3. Install delineators behind the rail at guardrail locations. Either drive the delineator in line with the guardrail posts or mount a shorter delineator onto the guardrail post as shown on this sheet.
4. When the contract does not provide for the construction of the ultimate pavement, allow for the thickness of base and pavement to be placed later when establishing the elevation of the traffic delineators.
5. Use the current edition of the Manual on Uniform Traffic Control Devices for Streets and Highways (MUTCD) as a guide for delineation layout.

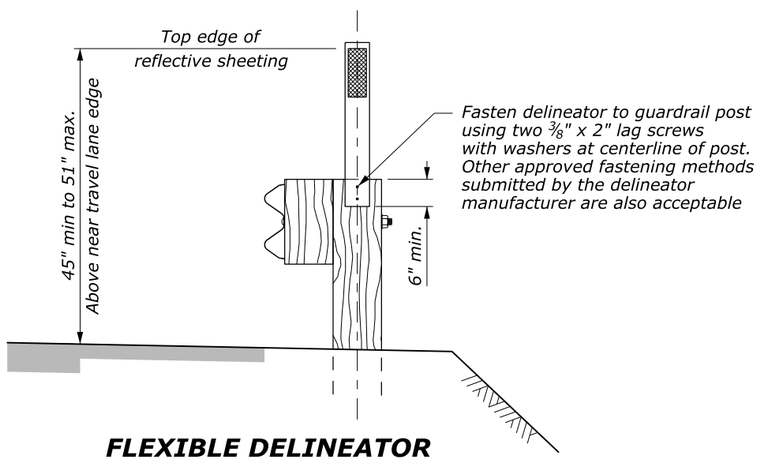

FLEXIBLE DELINEATOR
GUARDRAIL MOUNTED OPTION
(Use only with wood guardrail posts)

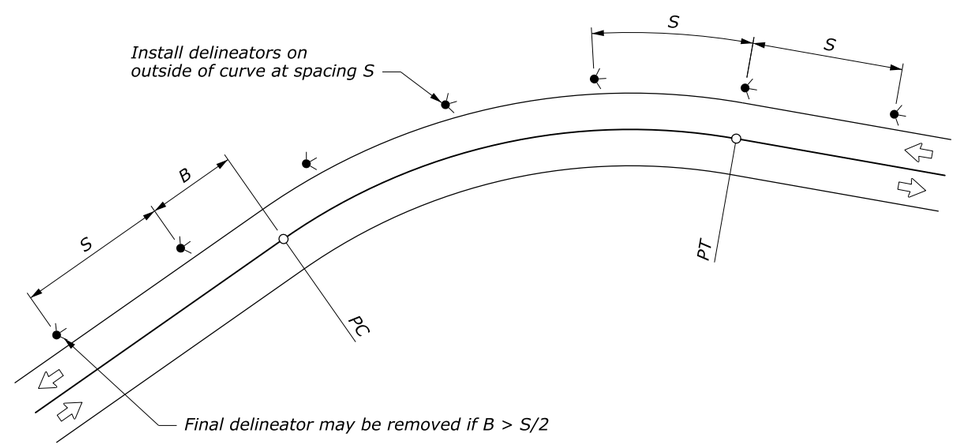

PLACEMENT ON HORIZONTAL CURVES

DELINEATOR SPACING ON HORIZONTAL CURVES	
CURVE RADIUS (FEET)	SPACING (S) (FEET)
50	20
115	25
180	35
250	40
300	50
400	55
500	65
600	70
700	75
800	80
900	85
1,000	90

Spacing for a specific curve may be interpolated from the table, or calculated using the formula:
Spacing = $3\sqrt{R-50}$.
The minimum spacing should be 20 feet.
Curve spacing should not exceed 300 feet.

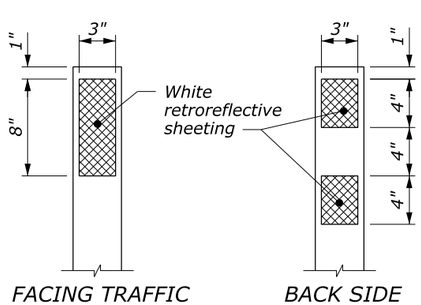

REFLECTIVE SHEETING DETAIL

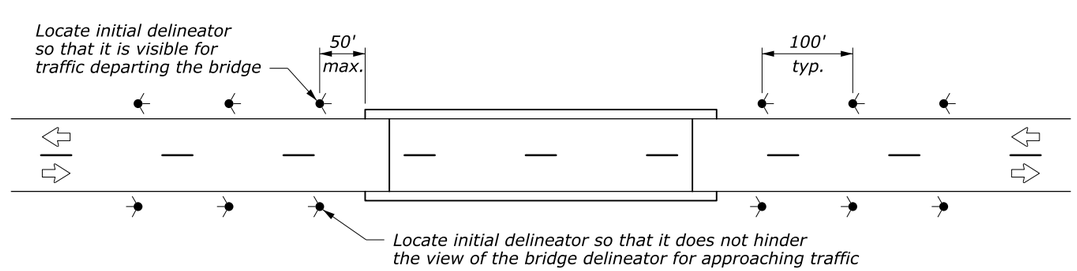

PLACEMENT AT BRIDGE APPROACHES

NO SCALE

U.S. DEPARTMENT OF TRANSPORTATION
FEDERAL HIGHWAY ADMINISTRATION
WESTERN FEDERAL LANDS HIGHWAY DIVISION

U.S. CUSTOMARY DETAIL

WASHINGTON DELINEATORS

DETAIL APPROVED FOR USE 1/2008
REVISED:

DETAIL
W633-80

20 November 2014 10:32 AM c:\myfiles\pw_production\dms43644\Det.W633-80.dgn [USC]