STATE	PROJECT	SHEET NUMBER

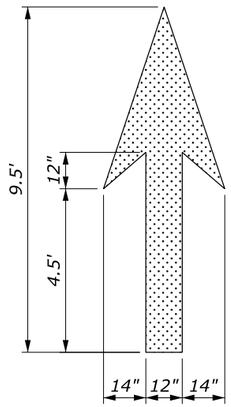

THROUGH LANE-USE ARROW

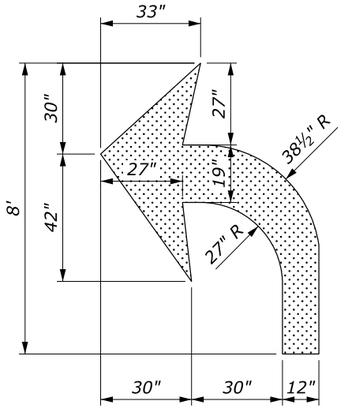

TURN LANE-USE ARROW

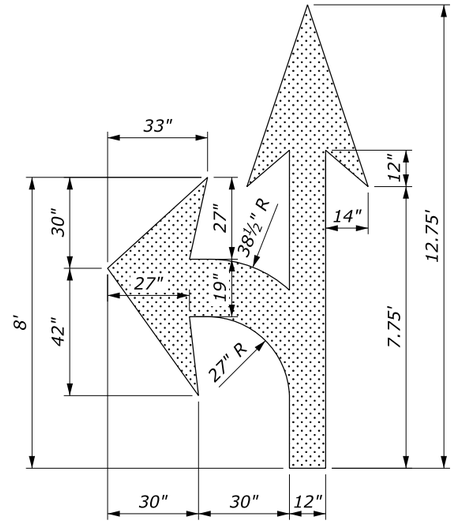

TURN AND THROUGH LANE-USE ARROW

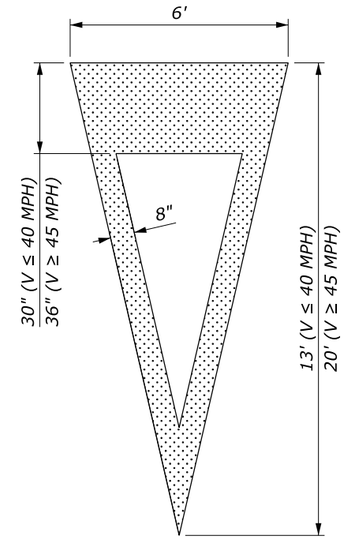

YIELD AHEAD TRIANGLE SYMBOL

NOTE:

1. *Place pavement word and symbol markings in accordance with the ''Manual on Uniform Traffic Control Devices'' (MUTCD), current edition.*
2. *All letters, numerals and symbols shall conform with the "Standard Highway Signs", current edition.*
3. *The Accessibility Parking Space marking only includes the accessibility symbol unless a border is indicated in the Striping Plans.*

PAVEMENT MARKING AREAS

TYPE	SQFT
Through Lane-Use Arrow	12
Turn Lane-Use Arrow	16
Turn and Through Lane-Use Arrow	26
Yield Ahead Triangle (V≤40 MPH)	26
Yield Ahead Triangle (V≥45 MPH)	37
Accessibility Marking (symbol only)	2
Accessibility Marking w/ border (White)	5
Accessibility Marking w/ border (Blue)	9
AHEAD Word Marking	30
ONLY Word Marking	21
SCHOOL Word Marking	33
STOP Word Marking	22
YIELD Word Marking	24

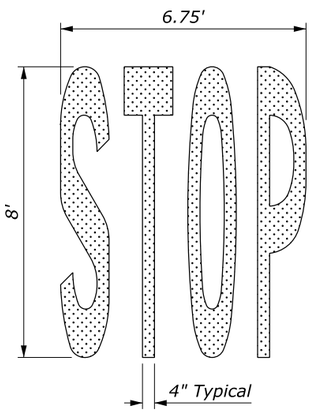

"STOP" WORD MARKING

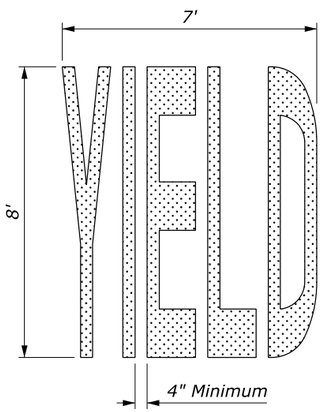

"YIELD" WORD MARKING

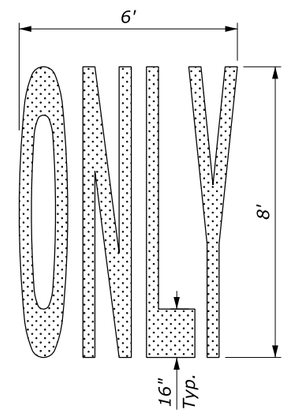

"ONLY" WORD MARKING

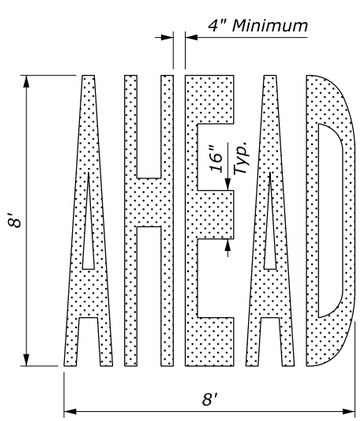

"AHEAD" WORD MARKING

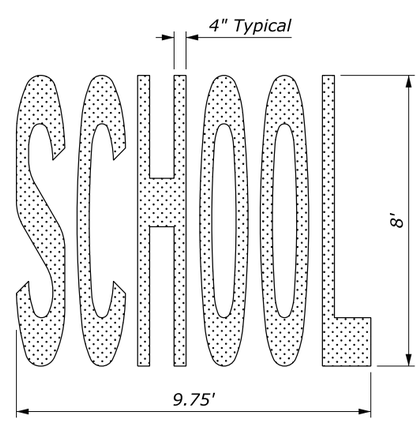

"SCHOOL" WORD MARKING

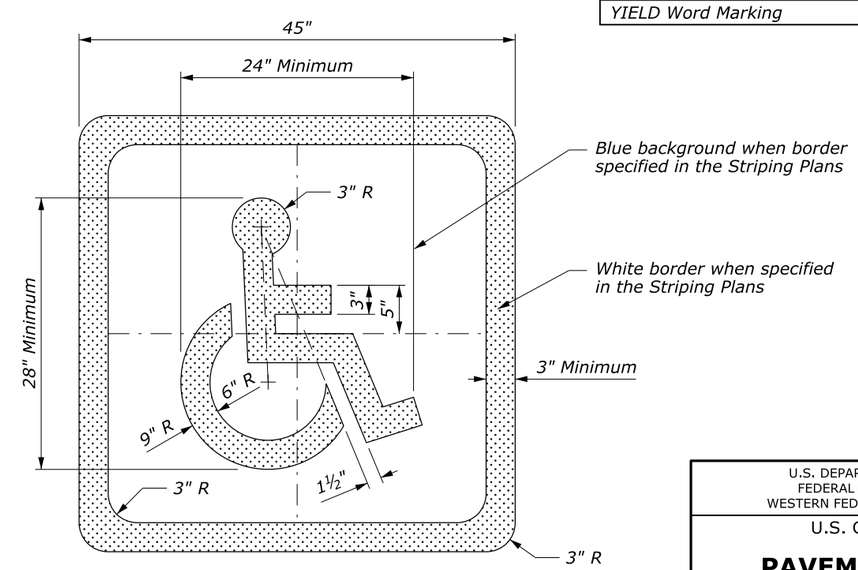

ACCESSIBILITY PARKING SPACE MARKING

NO SCALE

U.S. DEPARTMENT OF TRANSPORTATION
FEDERAL HIGHWAY ADMINISTRATION
WESTERN FEDERAL LANDS HIGHWAY DIVISION

U.S. CUSTOMARY DETAIL

PAVEMENT MARKINGS SYMBOLS AND WORDS

DETAIL APPROVED FOR USE 3/2003
REVISED: 11/2006 10/2007

DETAIL W634-1

4 November 2014 7:23 AM c:\myfiles\pw_production\dms43503\Det.W634-1.dgn [USC]